Инструкция

Беговая дорожка Adidas T-16

Полезные ссылки:

Беговая дорожка Adidas T-16 - смотреть на сайте

Беговая дорожка Adidas T-16 - читать отзывы

ADIDAS TREADMILL T-16 ASSEMBLY GUIDE

adidas

HARDWARE PACK

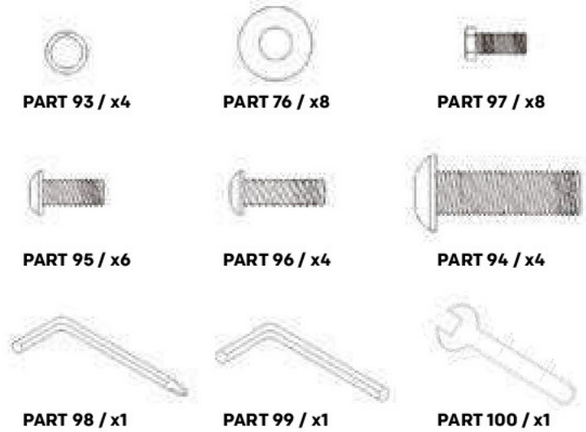

1

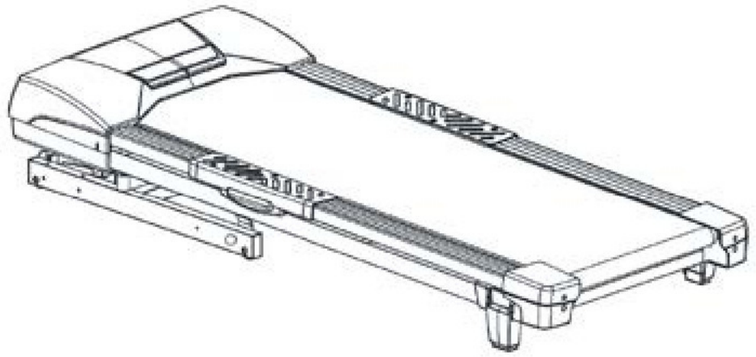

2

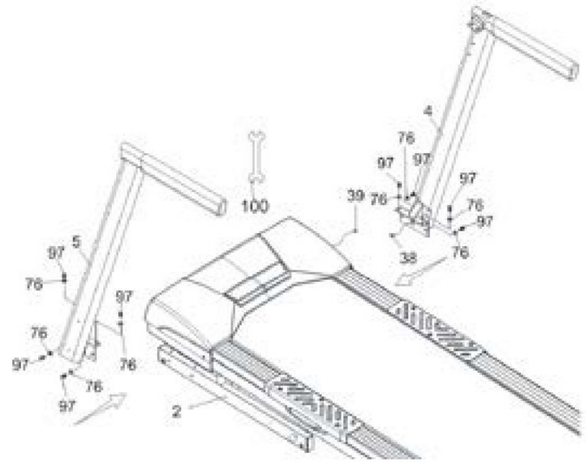

3

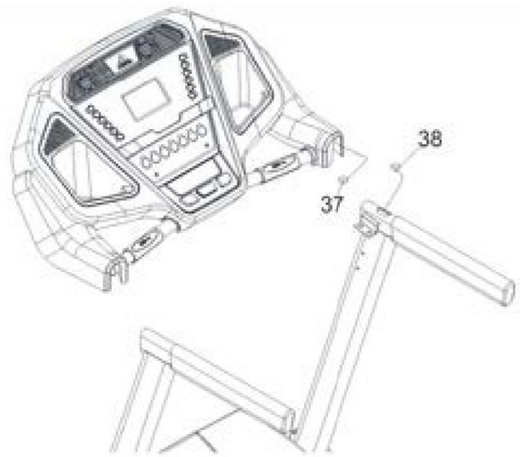
38
37

4

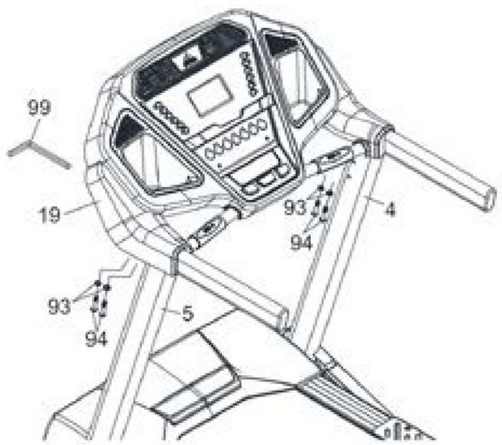
99
19
93
94
4
93
94
5

5

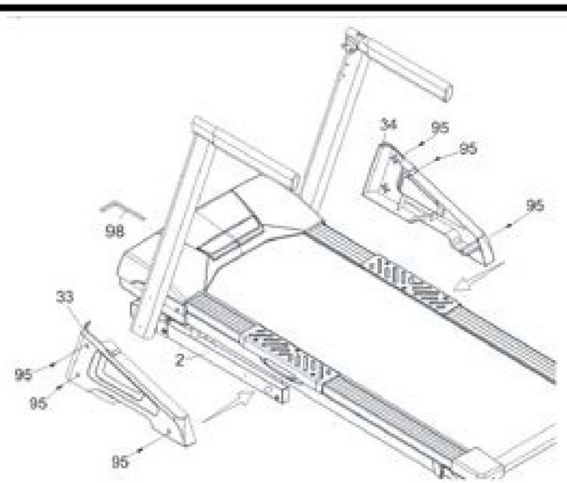
34
95
95
95
98
33
95
95
95
2

6

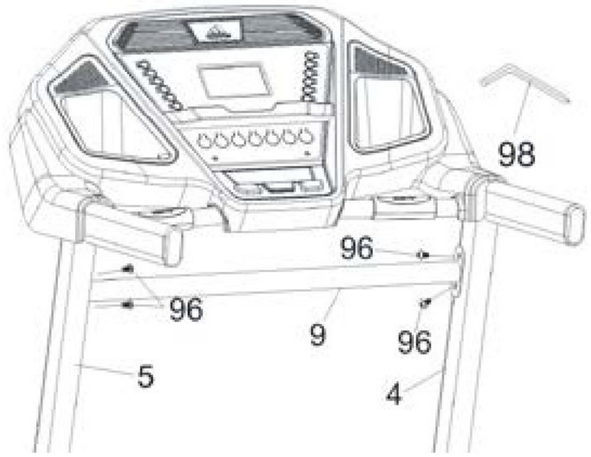
98
96
96
9
96
5
4

7

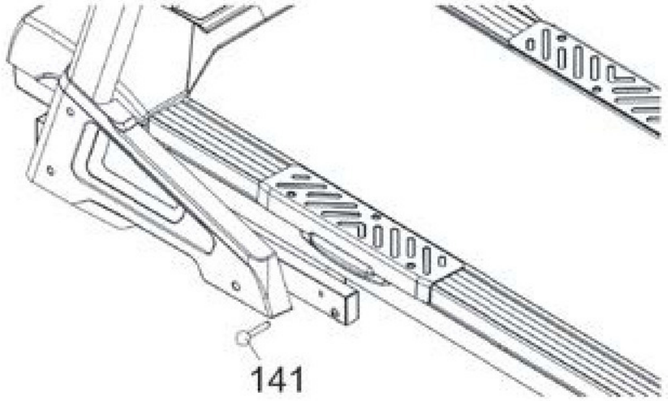
141

NO.	DESCRIPTION	Q'TY
1	Main Frame	1
2	Frame Base	1
3	Incline Bracket	1
4	Right Upright	1
5	Left Upright	1
6	Console Support	1
9	Handrail Support	1
10	Foot Pad Plate	2
11	Drive Belt	1
12	Front Roller W/Pulley	1
12~3	Magnet	2
13	Rear Roller	1
14	Running Deck	1
15	Running Belt	1
16	Drive Motor	1
17	Incline Motor	1
18	Motor Controller	1
19	Console Assembly	1
19~1	Console Top Cover	1
19~2	Console Bottom Cover	1
19~3	Front Console Cover (Inner)	1
19~4	Drink Bottle Holder (L)	1
19~5	Drink Bottle Holder (R)	1
19~6	Book Rack	1
19~7	Deflector Fan Grill	1
19~8	START Key	1
19~9	STOP Key	1
19~10	Console Display Board	1
19~11	Key Board(AK0858G5_V10(START))	1
19~12	Key Board(AK0858G4_V10(STOP))	1
19~13	Key Board(AK0858G3_V10)	1
19~14	Key Board(AK0858G2_V10(incline))	1
19~15	Key Board(AK0858G1_V10(speed))	1
19~16	300m/m_Speaker W/Cable	2
19~17	W/Receiver, HR	1
19~18	400m/m_Receiver Connecting Cable	1
19~19	500m/m_Sound Board W/Cable	1
19~20	400m/m_Safety Switch Module W/Cable	1
19~21	Fan	1
19~22	2.3 × 6m/m_Sheet Metal Screw	35
19~23	Square Magnet Stop Plate	2
19~24	3.5 × 12m/m_Sheet Metal Screw	39
19~25	3.5 × 32m/m_Sheet Metal Screw	8
19~26	Speaker Grill Anchor	6
19~27	Fan Grill Anchor	2
19~28	Fan Fixing Plate	2
20	Motor Top Cover	1
21	Motor Bottom Cover	1

NO.	DESCRIPTION	Q'TY
22	Top Motor Cover Plate	1
23	Rubber Foot	6
24	Belt Guide	2
25	Motor Cover Anchor	4
26	Rear Adjustment Base (L)	1
27	Rear Adjustment Base (R)	1
28	Rear Foot Cover (L)	1
29	Rear Foot Cover (R)	1
30	Motor Bracket	1
31	EUP Fixing Plate	1
32	Transportation Wheel End Cap	4
33	Frame Base Cover (L)	1
34	Frame Base Cover (R)	1
35	1200m/m_Sensor W/Cable	1
35~1	Sensor Rack	1
36	PVC Handgrip	2
37	1000m/m_Computer Cable (Upper)	1
38	1300m/m_Computer Cable (Middle)	1
39	1100m/m_Computer Cable (Lower)	1
40	1000m/m_Handpulse W/Cable Assembly (White)	1
41	1000m/m_Handpulse W/Cable Assembly (Red)	1
42	Transportation Wheel	4
43	Cylinder	1
45	300m/m_Foot Rail	2
46	715m/m_Foot Rail	2
47	Pedal Cover (Top)	2
48	Pedal Cover (Inner)	2
49	400m/m_Computer Cable(EUP)	1
50	150m/m_Connecting Wire (Black)	1
51	Grommet	1
52	On/Off Switch	1
53	Power Cord	1
54	800m/m_Trapezoidal Safety Key	1
55	Cushion Spacer	2
56	Handgrip End Cap	2
57	Ø10 x Ø24 x 3T_Nylon Washer	6
58	EUP Board	1
59	3/8″ × UNC16 × 1-3/4″_Hex Head Bolt	1
60	3/8″ × 3-3/4″_Hex Head Bolt	1
61	3/8″ × 2-3/4″_Hex Head Bolt	1
62	3/8″ × 3/4″_Hex Head Bolt	4
64	5/16″ × UNC18 × 1-3/4″_Button Head Socket Bolt	5
65	5/16″ × 1″_Button Head Socket Bolt	1
67	M8 × 60m/m_Hex Head Bolt	1
68	M8 × 80m/m_Socket Head Cap Bolt	2
69	M6 × 25m/m_Flat Head Socket Screw	6
70	M8 × 12m/m_Hex Head Bolt	2
71	3/8″ × 7T_Nyloc Nut	2

NO.	DESCRIPTION	Q'TY
72	5/16″ × 7T_Nyloc Nut	4
73	M8 × 7T_Nyloc Nut	1
74	Ø10 × Ø25 × 2.0T_Flat Washer	5
75	Ø10 × Ø19 × 1.5T_Flat Washer	6
76	Ø5/16″ × Ø18 × 1.5T_Flat Washer	14
77	Ø1/4″ × 19 × 1.5T_Flat Washer	8
78	Ø25 × Ø20 × Ø16 × Ø5 × 4.5H × 1.1T_Concave Washer	8
79	Ø8 × 1.5T_Split Washer	4
80	Ø10 × 2.0T_Split Washer	4
81	Ø5 × 1.5T_Split Washer	3
82	M5_Star Washer	3
83	4 × 12m/m_Sheet Metal Screw	20
84	5 × 16m/m_Tapping Screw	26
85	5 × 19m/m_Tapping Screw	1
86	3.5 × 16m/m_Sheet Metal Screw	6
87	5 × 16m/m_Tapping Screw	8
88	3 × 20 m/m_Tapping Screw	4
89	3.5 × 16 m/m_Tapping Screw	8
90	Ø5 × Ø15 × 1.0T_Flat Washer	4
91	M5 × 10m/m_Phillips Head Screw	3
92	Wire Tie Mount	8
93	Ø10 × 2.0T_Split Washer	4
94	3/8″ × 1-1/2″_Button Head Socket Bolt	4
95	M5 × 15m/m_Phillips Head Screw	6
96	5/16″ × 3/4″_Button Head Socket Bolt	4
97	5/16″ × 1/2″_Hex Head Bolt	8
98	M5 Allen Wrench & Phillips Head Screw Driver	1
99	M6_Allen Wrench	1
100	12m/m_Wrench	1
101	Lubricant	1
103	400m/m_Audio Cable	1
105	5 × 32m/m_Tapping Screw	4
106	5/16″ × 1/2″_Button Head Socket Bolt	2
110	Square End Cap	2
111	M8 × 25m/m_Flat Head Countersink Bolt	2
112	Oval End Cap	2
115	Fixing Plate	1
116	3 × 8m/m_Sheet Metal Screw	2
119	Choke	1
120	Filter	1
121	150m/m_Connecting Wire (White)	1
122	600m/m_Connecting Cable Of Motor	1
123	1000m/m_Ground Wire	1
136	Controller Back Plate	1
138	Rubber Foot Pad	2
140	5 × 25m/m_Tapping Screw	2
141	Locking Pin	1
142	M10 × P1.5 × 8.0T_Nyloc Nut	4

NO.	DESCRIPTION	Q'TY
143	3.5 × 12m/m_Sheet Metal Screw	2
145	13L_Bolt Cap	4
146	14L_Bolt Cap	1
147	M10 × P1.5 × 30m/m_Socket Head Cap Bolt	4

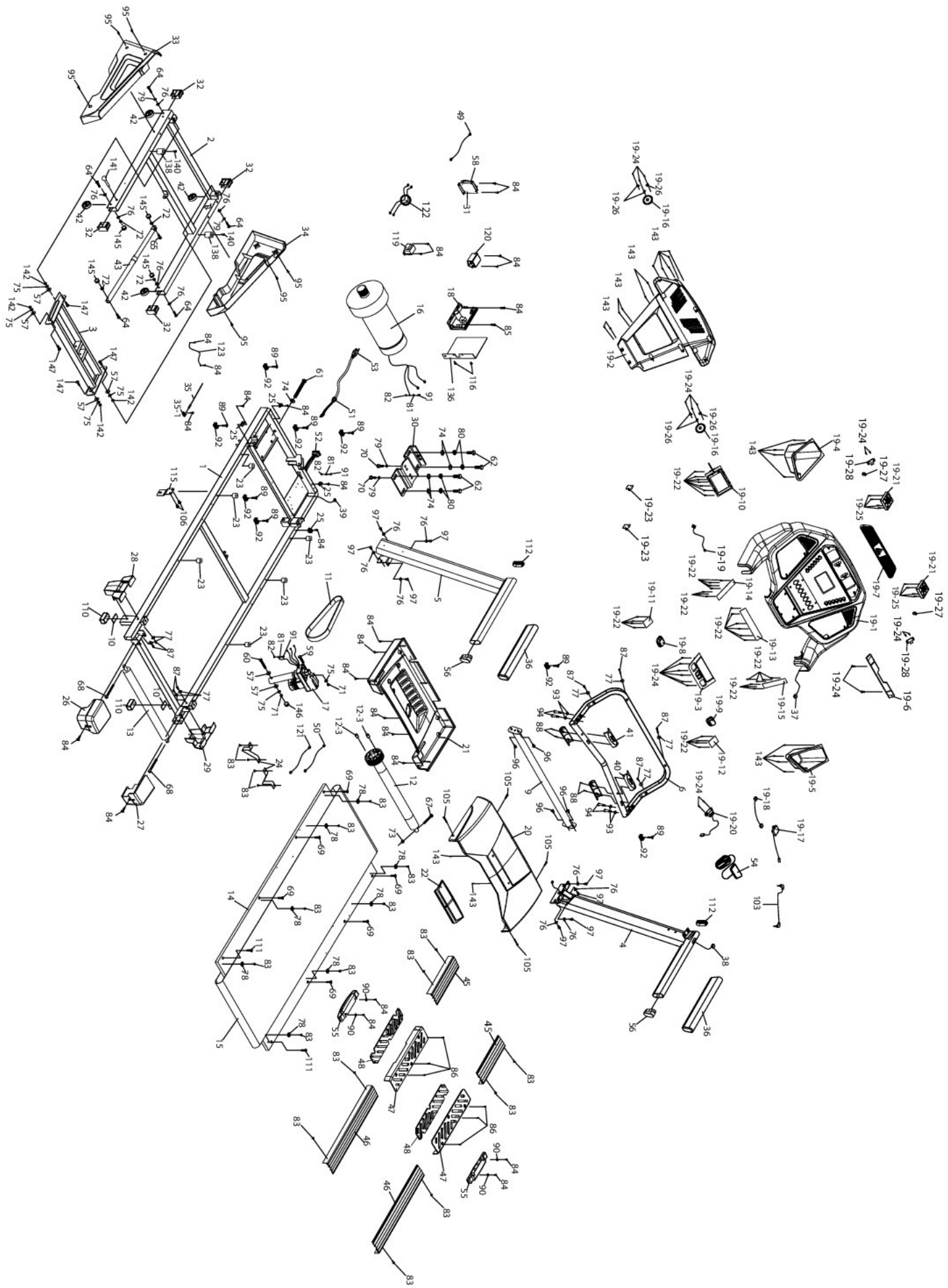

adidas

ADIDASHARDWARE.COM