Инструкция

Гиперэкстензия Bronze Gym J-026

Полезные ссылки:

Гиперэкстензия Bronze Gym J-026 - смотреть на сайте

J SERIES -26USE MANUAL

ROMAN CHAIR

McGrp.Ru

CONTENT

IMPORTANT DECLARATION……..1

WARNING……..2

USE INSTRUCTION……..3

REGULAR MAINTENANCE……....4

EXPLODED PICTURE……...5

ASSMBLE STEP……..6

IMPORTANT DECLARATION:

First we are highly appreciated that you buy **K-26 ROMAN CHAIR.**

For your health and safe, before you exercise please consult from your doctor and define a appreciated exercise burden for yourself. Before using this equipment read carefully all related instructions and notice. In this way you gain more happiness during exercise. When you begin to use **K-26 ROMAN CHAIR**, our company think you have read use manual already.

After you buy this equipment, please fill carefully 'post-sale service warranty card' and keep it, meanwhile, post return receipt (stub) back to our company so that we provide better service for you.

This manual is the first edition 2011 of series products **K-26 ROMAN CHAIR.** The content of manual will change along with promotion of products, and we will not inform you.

McGrp.Ru

All notice and instruction are in order to keep yoafe and use this equipment correctly. If not obeying the suggestion, take the consequence yourself.

After reading, the user must keep this manual in the place you can see it at anytime.

PRODUCTS INTRODUCTION:

1 The main frame adopts the high-quality steel tube of for use, durable and safe.

2 Adopt high strength steel cable as transmitting wire and you will feel safe and durable.

3 The weight stack adopts casting iron and has protective cover.

4 Rotating part adopts the high-quality bearing, durable in use and there is no noise while using.

5 The high quality leader makes it smoother while using.

WARNING

1. This training equipment is only intended for use in training areasof organizations such as sport associations, educational establishment, hotels, clubs and studios, where access and control is specifically regulated by the owner (person who has the legal responsibility).
2. The training equipment shall only be used in areas where access control is specifically regulated by the owner; the extent of control depends on the users, e.g. degree of reliability, age, experience, etc.
3. The training equipment shall only be used in supervised areas.
4. Always keep unsupervised children and disabled away from the equipment.
5. Injury to health may result from incorrect or excessive training, please consult the couch to choice correct exercise method and proper burden.
6. Please adjust the load and equipment further (e.g. seat adjustment) before using.
7. Please check if the bolt and handrail are out of work before you start to use it.
8. When weight stacks, booms and other parts of this equipment are blocked, must handle with other people's assistance, in case that the weight stacks may suddenly drop and cause accident.
9. Adjust the length of the steel cable properly and never make the steel wire rope twist. After using the machine for a period, the owner shall check the steel cable to make sure no unusual phenomena in connecting. When meet any problems, please consult the professional maintenance personal at once.
10. Do not suddenly drop the weight stack. In order to avoid destroying other weight stacks, please raise it when the weight stacks nearly collide.
11. While using, forbid hands stretching into the weight stacks or the relative motion parts, so as not to injure the finger.
12. Never allow person with heart disease and children under 12 to use this equipment.
13. The training equipment is in compliance with EN 957-2 class S(S=studio);
14. The max training weight is 150kgs (330pound). The max user's body weight is 150kg (330pound).
15. The machine should be located stably. A space of 2000mm*2000mm should be around the machine。
16. The scope of products: Primary use in professional fitness club.The second is the residence community， gym of some company
17. If you feel swirl, surfeit and other discomfort sense, Please stop exercising and go for doctor.
18. The equipment should be installed on stable even surface.
19. The machine shall only be used indoor and be avoid of moisture.
20. Wear right shoes and coat
21. Warm up before exercising
22. Don't use the equipment to do the impossible function
23. Please exercise under instruction by professional coach.
24. Inspect if the equipment is fastness before using
25. Any of the adjustment devices that could interfere with the user movement should not be left projecting.

McGrp.Ru

USE INSTRUCTION:

K-26 ROMAN CHAIR

Exercise position:Abdominal,Scapular muscle

Dimension: 1200mm (L)*660mm(W)*880 mm(H) weight : 30kg

Use Instruction:

1 Read all caution Warning Labels before using this equipment.

2 Adjust seat pad and sit with your back firmly against back pad.

3 Insert pin into weight stack at desired resistance level.

4 Hold the lever firmly, securely position both hands in an overhand grip or with palms facing each other.

McGrp.Ru

5 Keeping your arms close to your sides, slowly push forward while maintaining a smooth, comfortable exercise movement.

6 Parse for a moment, then slowly return to the start position and repeat the movement.

NOTICE:

1.Warm-up…..It needs warm-up for 5-10 minutes before starting exercise, for instance mark time, free-standing exercises etc., in order to move each joint muscle, so as not to injure the joint muscle while exercising.

2 Diet ……Eat some more protein, vegetables, and fruit. Begin to do exercises until 40 minutes after a meal. Taking food until half an hour after doing exercises and drink little water while doing exercise.

3.Breath……..Breathe in while exerting oneself, exhale while relaxing. To coordinate breathe with movement.

4 Frequency…It needs to take a rest over 48 hours before exercising the same muscle.

5 Burden…….Exerciser should choose suitable weight according to one's own actual conditions, make sure not to be overweight, so as not to cause the muscle to draw wounded. Exercises should according to the progressive principle; it is normal to feel ache while exercise for the first time.

REGULAR MAINTENANCE

1. The safety level of the equipment can be maintained only if it is examined regularly for damage and wear, e.g. ropes, pulleys, connection points;
2. Pay special attention to components most susceptible to wear.
3. Replace defective components immediately and /or keep t he equipment out of use until repair;
4. This equipment should carry on regular maintenance according to the following chart:

MAINTENANCE	EVERYDAY	EVERY WEEK	THREE MONTHS
Check: connecting, bolt, Weight stack bolt	√		
Clearance: cushion and cover	√		
Lubrication: place of sliding			√
Check: bolt if tighten		√	
Lubrication: Bracket of bearing			√

McGrp.Ru

INSTALL SKETCH MAP

Let assembly become easier

All the content of user's manual is to assured the strength training machine can be installed more easily

Reading the details and instructions before installing:

1. Because the size and weight of equipment is so large, Please choose the installed place near the desired station and assured there is enough space to exercise
2. All parts can be put on the clear area, then backout the wrapper. And the wrapper can't be through away before installation finished.
3. Screw the bolt tightly except the additional instruction
4. All parts must be installed according the illustration indication.
5. Installation work can be finished by tow men
6. Identify all parts by part identify chart

Exploded Picture

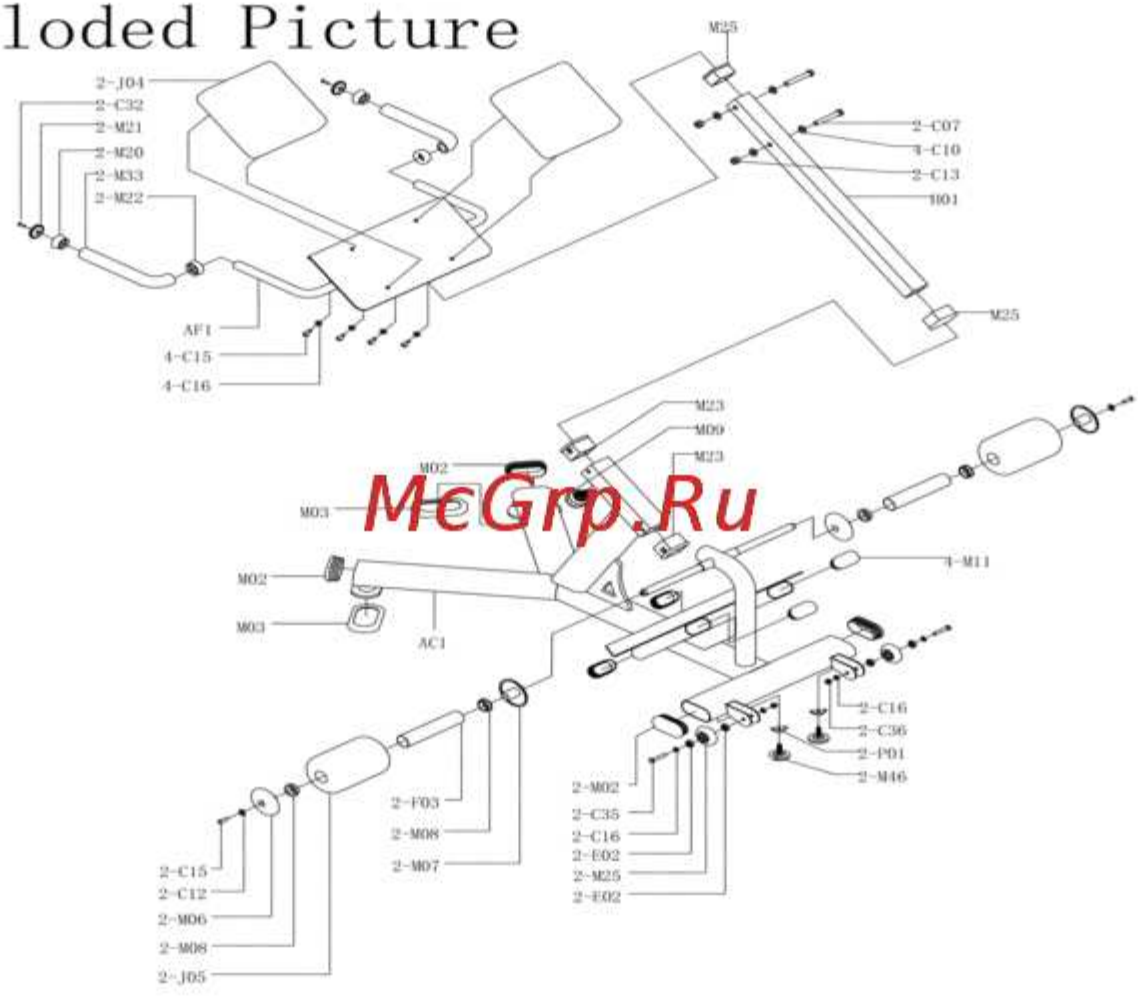

McGrp.Ru

Assmble Step：

Use tool：

1. **M6 Hex spanner**
2. **Two 17-19 spanner**

McGrp.Ru

Step1

No	Name	Spec	Pcs
C15	Hexagon socket button head screws	M8×1.25P-25L	2
C12	Flat gasket	¡ Ø1*¡ Ø0*2t	2
M06	small foam cover	¡ Ø00	2
M07	big foam cover	¡ Ø00	2
F03	foam tube cover	¡ Ø0×191L×1T	2
J05	foam	¡ Ø25×200L	2

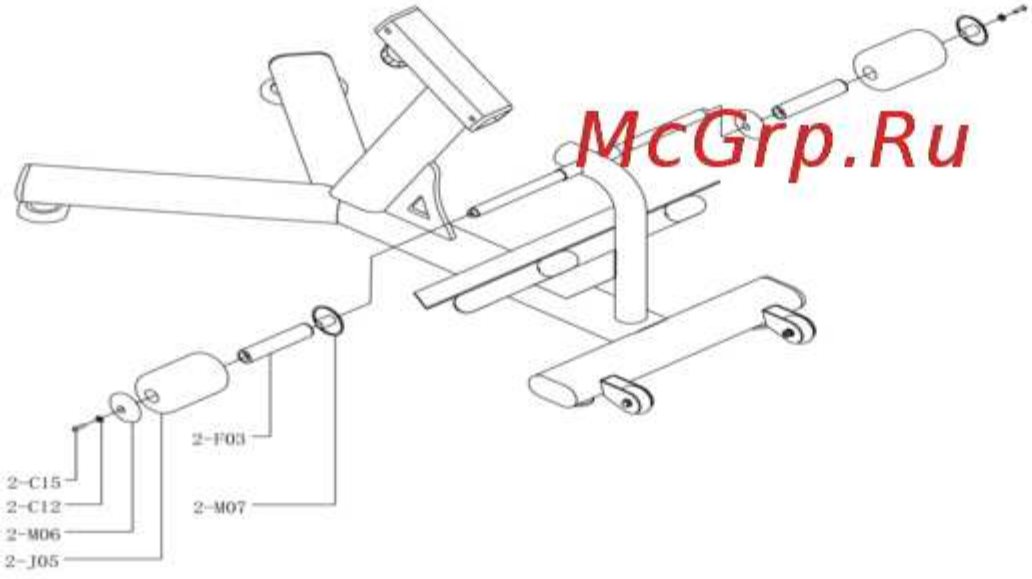

McGrp.Ru

Step2

No	Name	Spec	Pcs
AF1	arm group		1
C07	Outer hexagon screw	M12×1.75P-80L	2
C10	Flat gasket	¡ Ø3.5×¡ Ø4×t2.5	4
C13	lock nut	M12×1.75P	2
C15	Hexagon socket button head screws	M8×1.25P-25L	4
C16	gasket	¡ Ø8×¡ Ø6×t1.6	4
H01	asjuting tube	50×50×2.5t×750	1
J04	seat cushion	B1	2

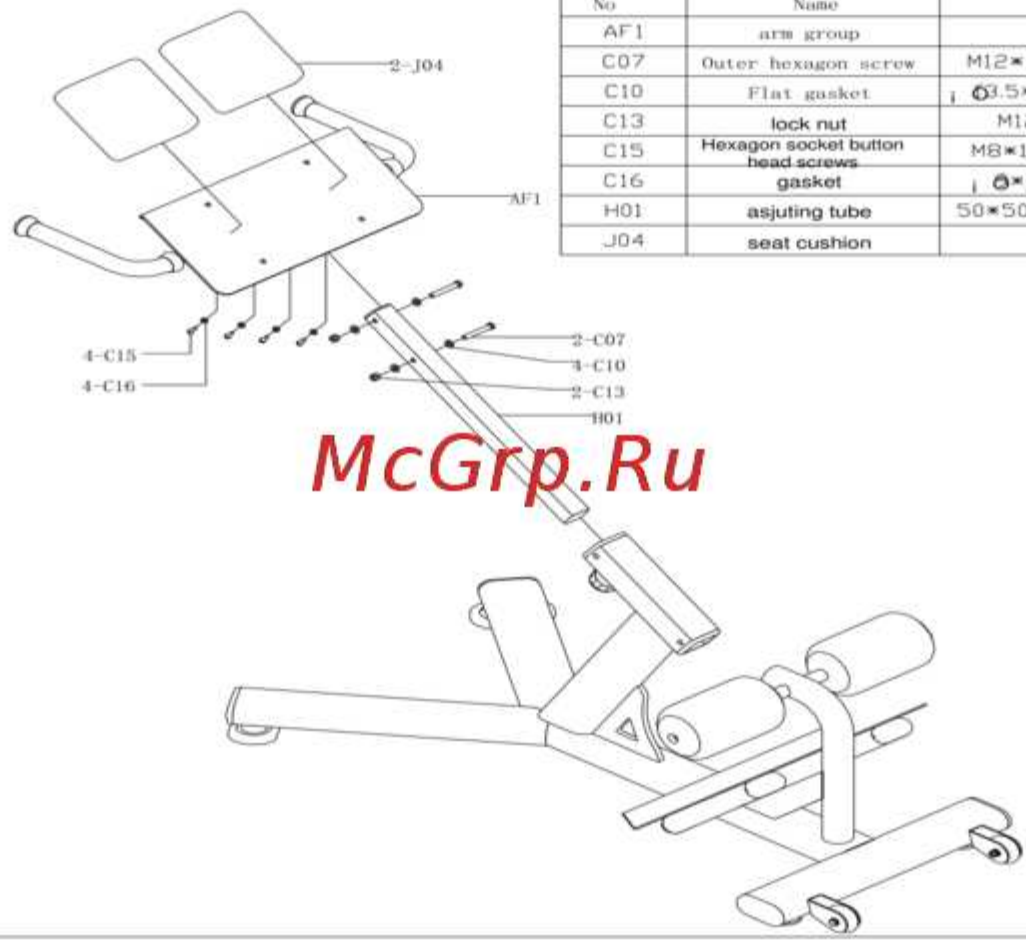

McGrp.Ru