Инструкция

Гребная тяга рычажная Bronze Gym LD-9034

Полезные ссылки:

Гребная тяга рычажная Bronze Gym LD-9034 - смотреть на сайте

Гребная тяга рычажная Bronze Gym LD-9034 - читать отзывы

LD-9034 Vertical row

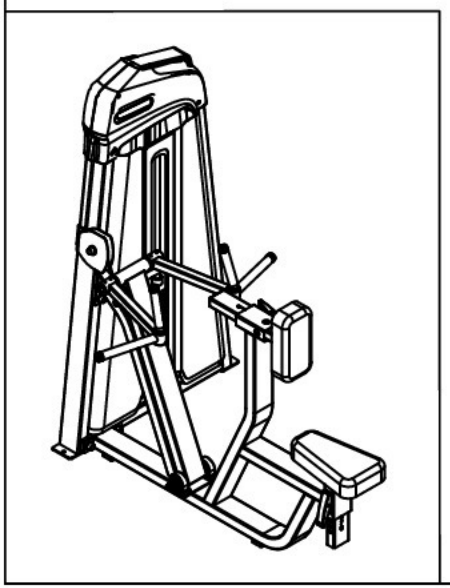

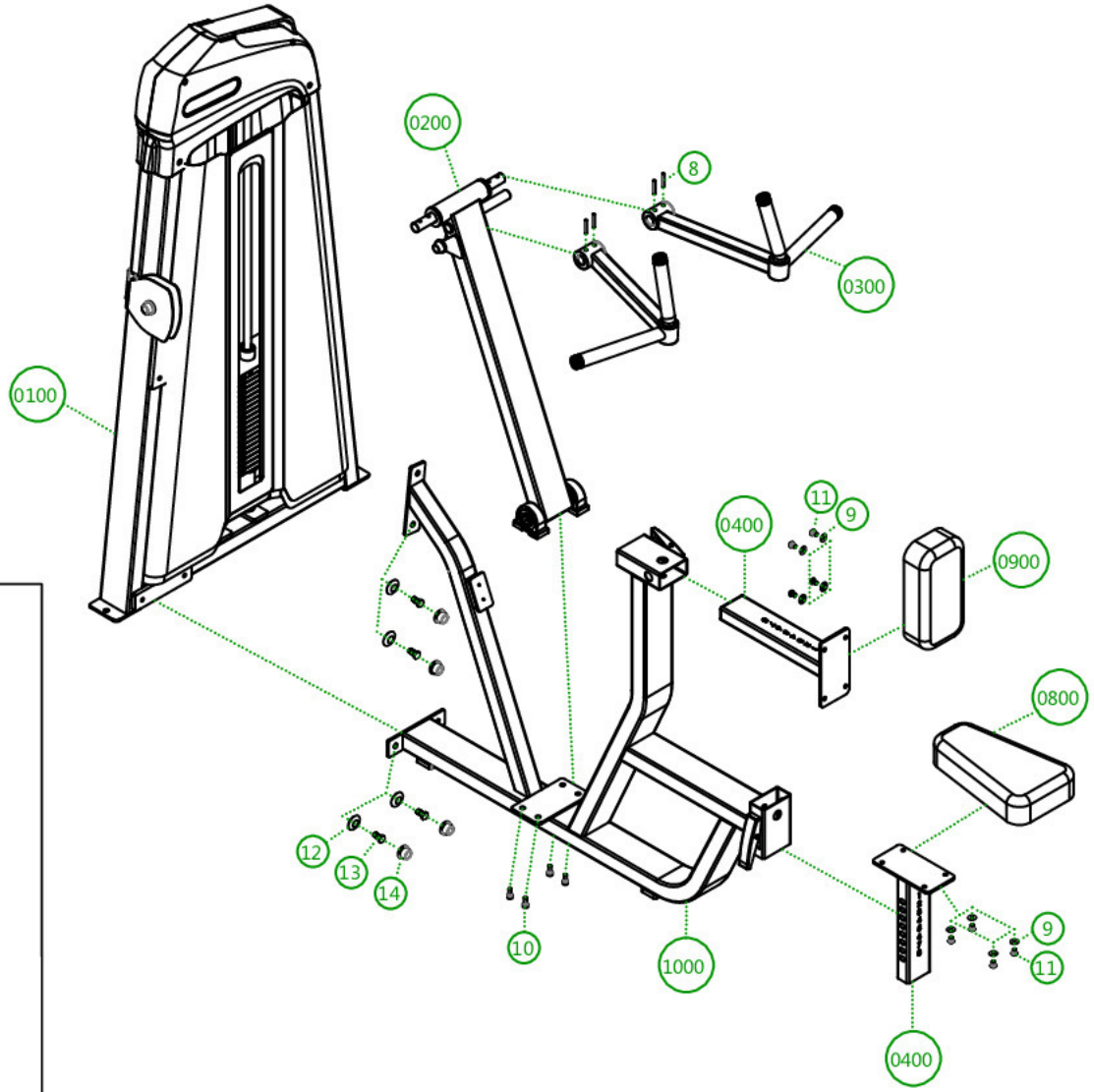

LD9034 Vertical Row

Installationsteps:
1. Install0100 doorgroupand 1000 supportgroup
2. Install0200 movementarm partand 1000 supportset
3. Install0200 movementarm partand 0300 handleset
4. Install0400 cushionadjustmentgroupand 1000 support group
5. Installthemat

No	Draw No	QTY
14	30Screwcap	22
13	M12*20hexagorbolt	22
12	12 Washer	22
11	M8*30semicirclehead screw hexagon	6
10	M8*20 Socket cap screw	4
9	8 Washer	10
8	8*50 Elastic cylindricalpin	4
7	1000 Supportgroup	1
6	0900 Chestcushion	1
5	0800 Seat cushion	1
4	0400 Seat cushionadjustmentgroup	2
3	0300 Handset	2
2	0200 movementarmpart	1
1	0100 Doorgroup	1

LD9034 Vertical Row			
No	Name	QTY	Installation steps:
14	⌀30Screw cap	22	1. Install 0100 door group and 1000 support group
13	M12*20hexagon bolt	22	2. Install 0200 movement arm part and 1000 support set
12	⌀12 Washer	22	3. Install 0200 movement arm part and 0300 handle set
11	M8*30semicircle head screw hexagon	6	4. Install 0400 cushion adjustment group and 1000 support group
10	M8*20 Socket cap screw	4	5. Install the mat
9	⌀8 Washer	10	
8	⌀8*50 Elastic cylindrical pin	4	
7	1000 Support group	1	
6	0900 Chest cushion	1	
5	0800 Seat cushion	1	
4	0400 Seat cushion adjustment group	2	
3	0300 Hand set	2	
2	0200 movement arm part	1	
1	0100 Door group	1	