Инструкция

Опция сгибание-разгибание ног Body Solid Powerline PLDA1/PLDA11X

Полезные ссылки:

Опция сгибание-разгибание ног Body Solid Powerline PLDA1/PLDA11X - смотреть на сайте

PLCE-165

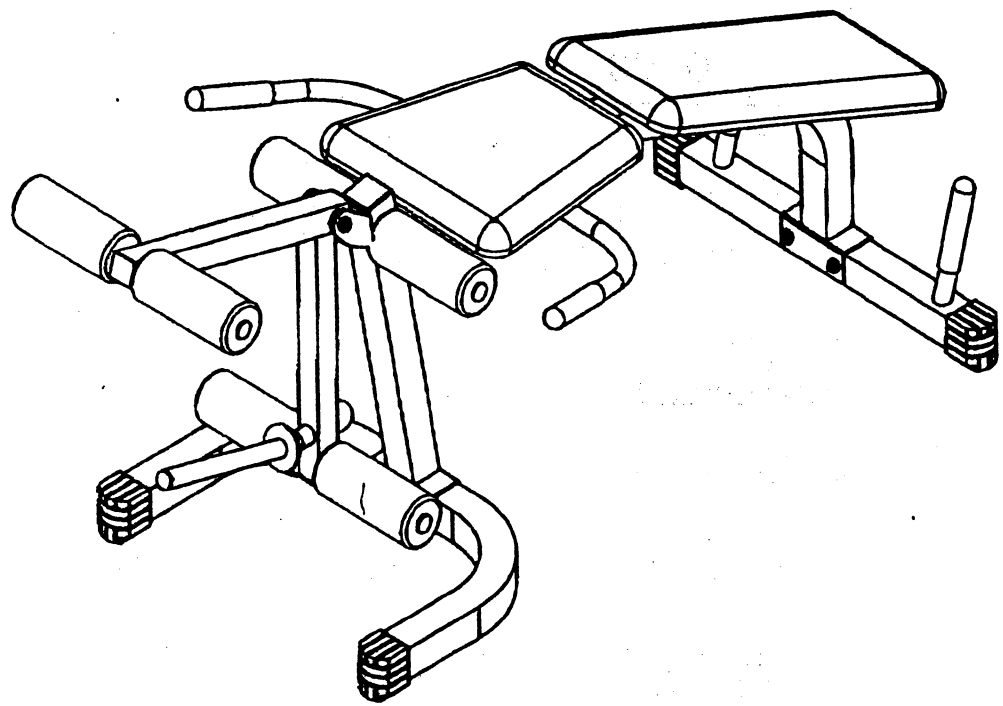

VERSION 0210

PLCE-165

HARDWARE ILLUSTRATION SHEET

	Qty.
A1. M10X75 HEX HEAD BOLT	[3PCS]
A2. M10X70 HEX HEAD BOLT	[4PCS]
A3. M8X70 HEX HEAD BOLT	[2PCS]
A4. M8X25 HEX HEAD BOLT	[4PCS]
B1. M10 NULON LOCK NUT	[7PCS]
C2. M8 (I.D.) WASHER	[6PCS]
C3. M8 SPRING WASHER	[6PCS]
D1. ø1" P.V.C. RUBBER GRIP (9212-015)	[4PCS]
D2. FOAM ROLLER (9161-029)	[6PCS]
D3. ø1" ROUND END CAP (9211-016)	[7PCS]
D4. 50X1.8t END CAP (9211-005)	[1PCS]
D5. 2"X2" FOOT CAP (9212-003)	[4PCS]
D6. ø1" RUBBER CANE CAP (9212-019)	[1PCS]
D7. 38X1.8t END CAP (9211-003)	[3PCS]

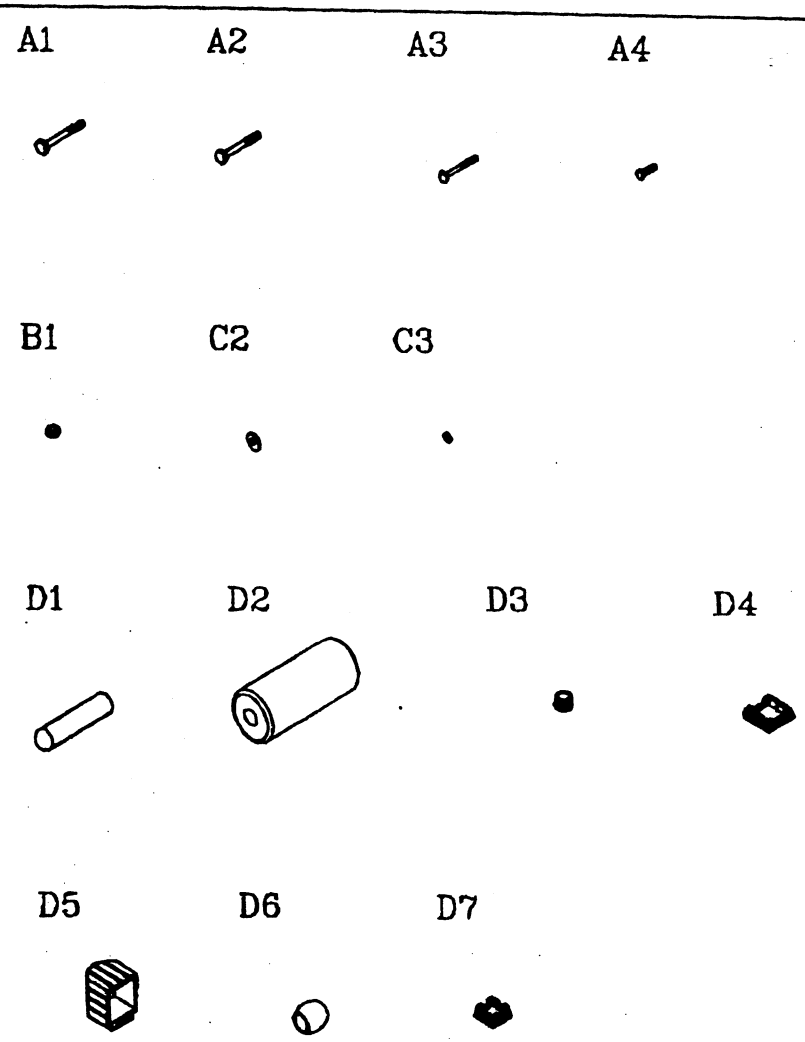

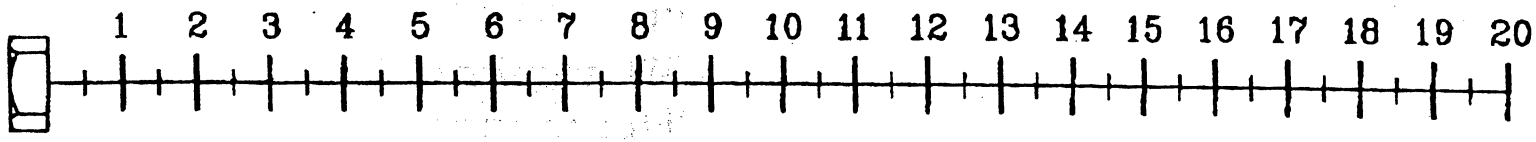

PLCE-165

HARDWARE ILLUSTRATION SHEET

A [1PCS]

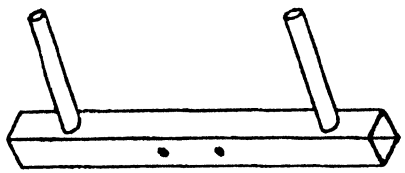

D [1PCS]

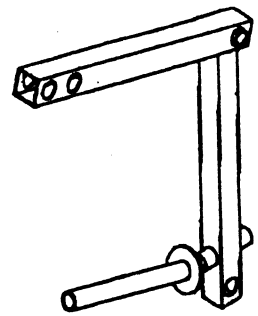

E [1PCS]

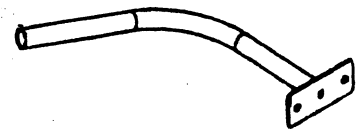

F [1PCS]

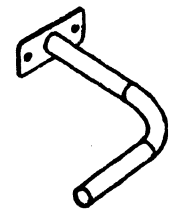

B [1PCS]

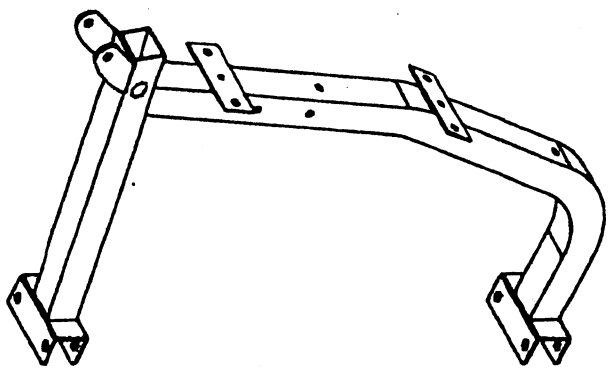

G [3PCS]

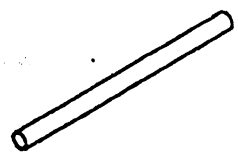

C [1PCS]

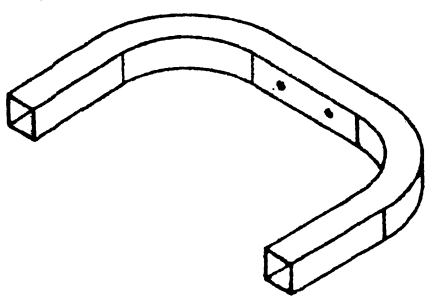

H [1PCS]

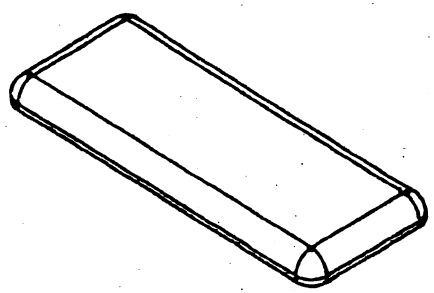

I [1PCS]

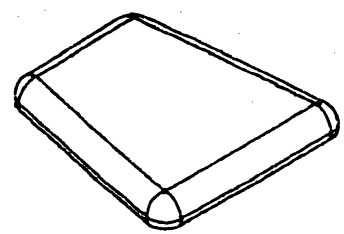

PLCE-165

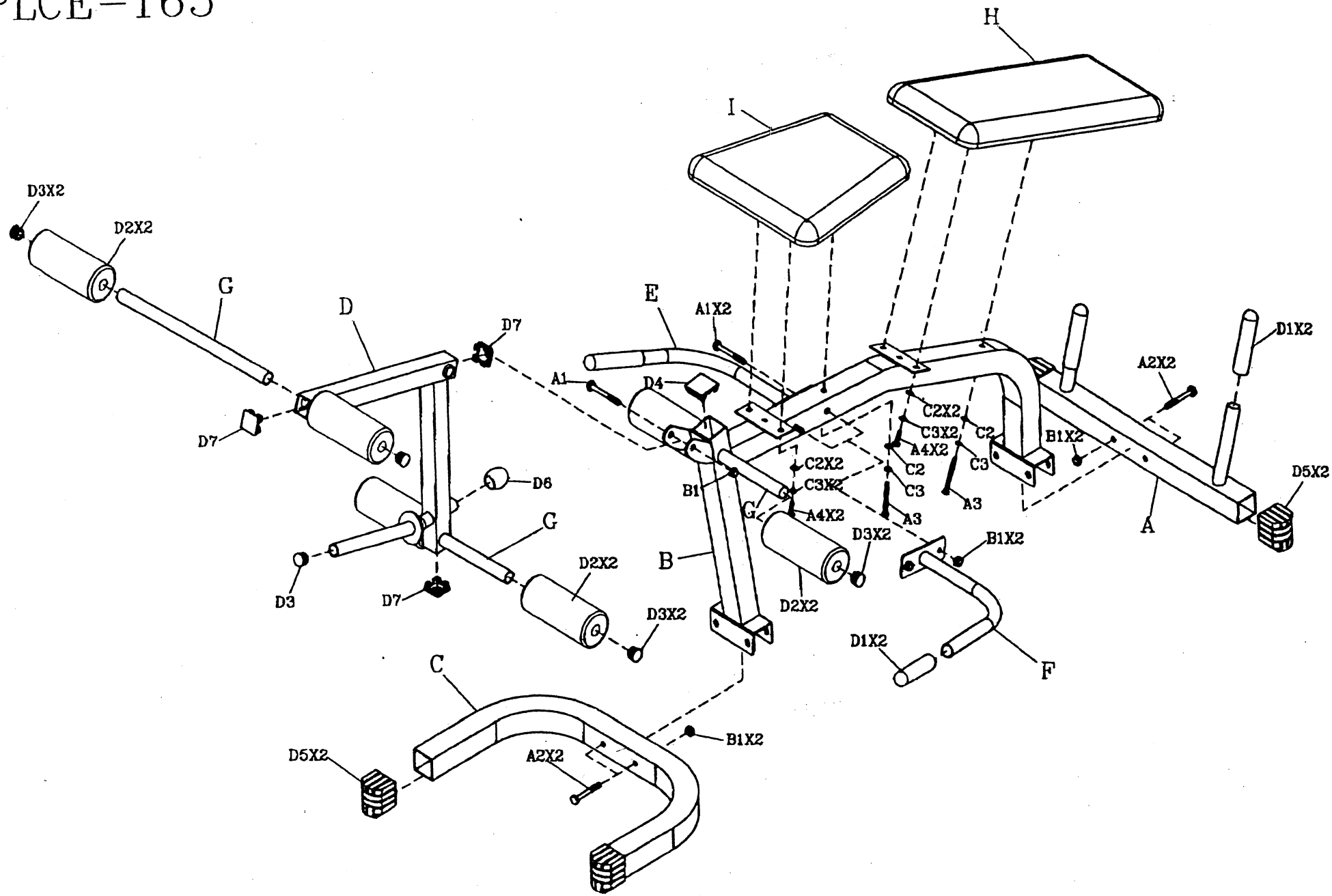

H
I
D3X2
D2X2
G
D
D7
E
A1X2
A1
D4
D7
D6
G
D3
D7
D2X2
D3X2
B1
G
A4X2
B
D2X2
D3X2
C2X2
C3X2
A4X2
C2
C3
C2
C3
A3
A3
B1X2
A2X2
D1X2
D5X2
A
B1X2
D1X2
F
C
D5X2
A2X2
B1X2