Инструкция

Отведение-приведение бедра стоя Body Solid ProClub SMH-1500G

Полезные ссылки:

Отведение-приведение бедра стоя Body Solid ProClub SMH-1500G - смотреть на сайте

Отведение-приведение бедра стоя Body Solid ProClub SMH-1500G - читать отзывы

SMH-1500G.1

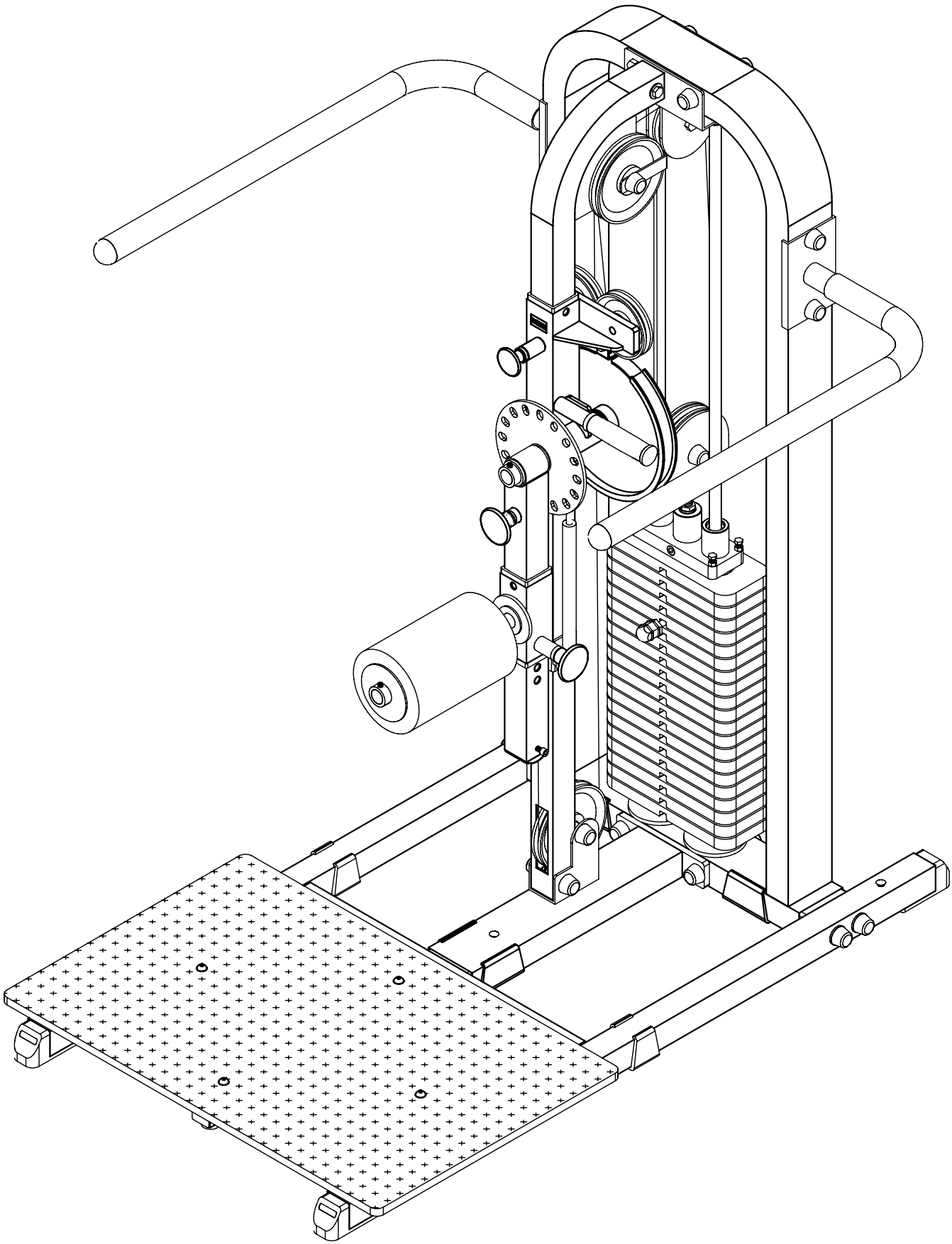

VERSION 0512

SMH-1500G.1 HARDWARE ILLUSTRATION SHEET

	Qty.
A1. 1/2"X5 1/4" HEX HEAD BOLT	[2PCS]
A2. 1/2"X5" HEX HEAD BOLT	[2PCS]
A3. 1/2"X3" HEX HEAD BOLT	[5PCS]
A4. 1/2"X2 1/2" HEX HEAD BOLT	[6PCS]
A5. 1/2"X2 3/4" HEX HEAD BOLT	[1PCS]
A6. 1/2"X2" HEX HEAD BOLT	[1PCS]
A7. 1/2"X1 3/4" HEX HEAD BOLT	[2PCS]
A8. 3/8"X2 3/4" HEX HEAD BOLT	[1PCS]
A9. 3/8"X2 1/2" HEX HEAD BOLT	[2PCS]
A10. 3/8"X1 1/4" HEX HEAD BOLT	[2PCS]
A11. M8X60 BUTTON HEAD SCREW	[4PCS]
A13. M10X16L HEX HEAD BOLT	[2PCS]
A14. 7/16"X1 1/2" ROUND HEAD BOLT	[1PCS]
A16. 10LB PIN	[1PCS]
A17. 1/2"X3 1/4" HEX HEAD BOLT	[1PCS]
A18. 5/16"X1 3/4" HEX HEAD BOLT	[1PCS]
A19. 1/2"X22L SLEEVE	[1PCS]
B1. 1/2" NYLON LOCK NUT	[13PCS]
B2. 3/8" NYLON LOCK NUT	[3PCS]
B3. 5/8" LOCK NUT	[1PCS]
B5. M8 NYLON LOCK NUT	[4PCS]
B6. 5/16 NYLON LOCK NUT	[1PCS]
C1. 1/2" (I.D)WASHER	[11PCS]
C2. 3/8" (I.D)WASHER	[2PCS]
C3. M8(I.D)WASHER	[8PCS]
C5. 1/2" SPRING WASHER	[2PCS]
C6. 5/8" SPRING WASHER	[1PCS]
C7. 1/2" ROUND END CAP WASHER	[30PCS]
C8. 3/8" ROUND END CAP WASHER	[3PCS]
C9. ø4" CHROME WASHER	[2PCS]
C10. M10 (I.D) WASHER	[2PCS]
C11. 5/16" (I.D)WASHERø16	[2PCS]

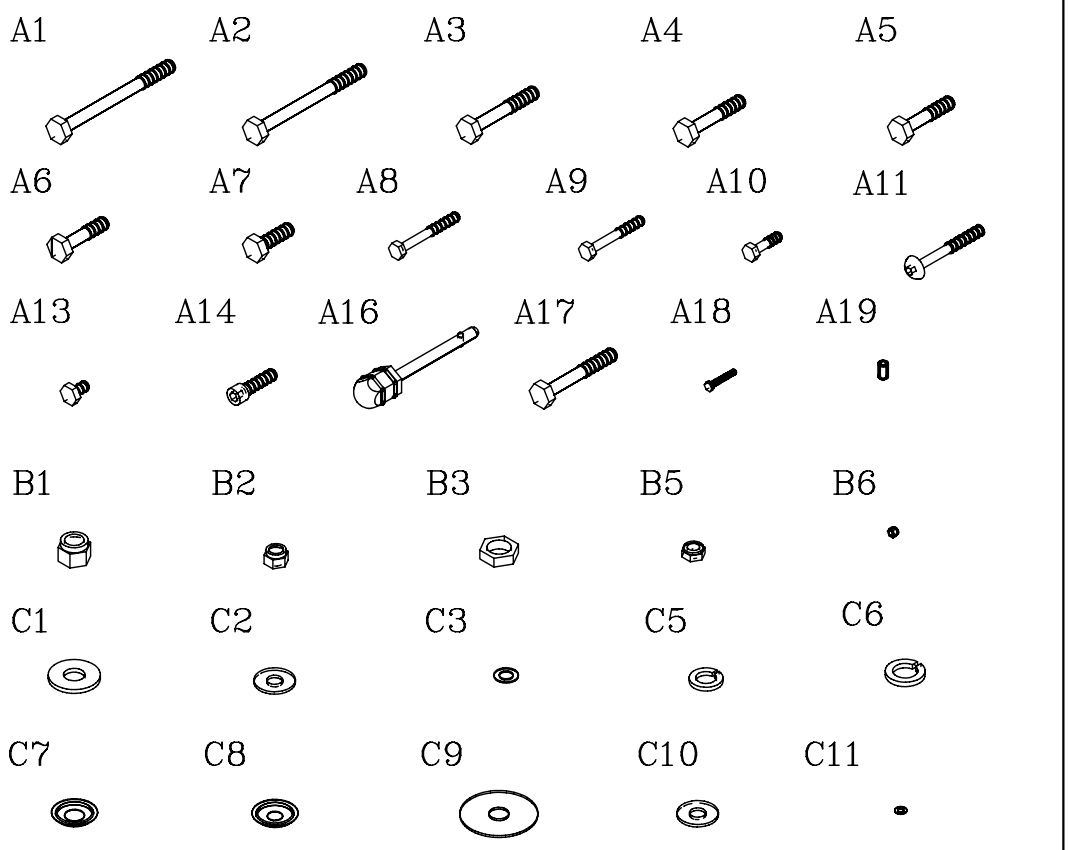

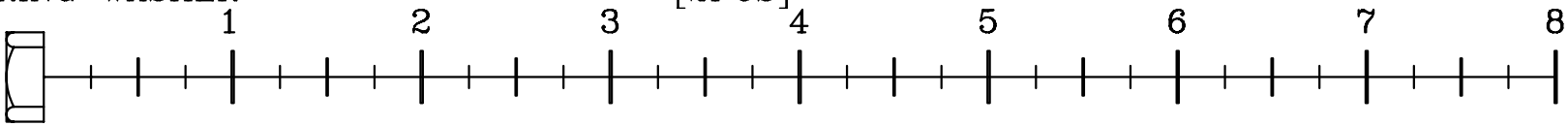

SMH-1500G.1 HARDWARE ILLUSTRATION SHEET

	Qty.
D1. BOLT CAP	[33PCS]
D2. ø6"X25t PULLEY (9213-009)	[2PCS]
D3. ø6"X50t PULLEY (9213-009)	[1PCS]
D4. ø4 1/2" PULLEY (9213-010)	[1PCS]
D5. 2"X4" FOOT CAP (9211-025)	[4PCS]
D6. 50"X50"X1.8t END CAP (9211-087)	[1PCS]
D8. 1 1/2"X1 1/2" END CAP (9211-003)	[4PCS]
D9. 60X50 NYLON BUSHING (9211-033)	[4PCS]
D11. ø1"X34X135 RUBBER GRIP (9212-016)	[1PCS]
D12. 2"X2" RUBBER DOUNT (9212-010)	[2PCS]
D13. 2"X4" RUBBER DOUNT (9212-009)	[3PCS]
D14. ø1" SHAFT COLLAR (8130-024)	[4PCS]
D15. ø3/4"X8L STEEL BUSHING (8110-014)	[3PCS]
D16. ø1"X10"L SHAFT BAR (8220-025)	[1PCS]
D17. ø4" RUBBER DOUNT (9310-017)	[2PCS]
D18. ø3" NYLON WASHER (9214-008)	[2PCS]
D19. TOP PLATE (8400-002)	[1PCS]
D20. WEIGHT SELECTOR BAR (8220-060)	[1PCS]
D21. ø6"X9" FOAM ROLLER (9161-020)	[1PCS]
D22. STEEL CABLE	[1PCS]
D23. ø3/4"X19.5L STEEL BUSHING (8110-017)	[1PCS]
D24. ø100 PULLEY (9213-017)	[2PCS]
D25. ø5/8" ROUND END CAP (9211-015)	[3PCS]
D26. ø3/4" SHAFT COLLAR (9211-046)	[2PCS]

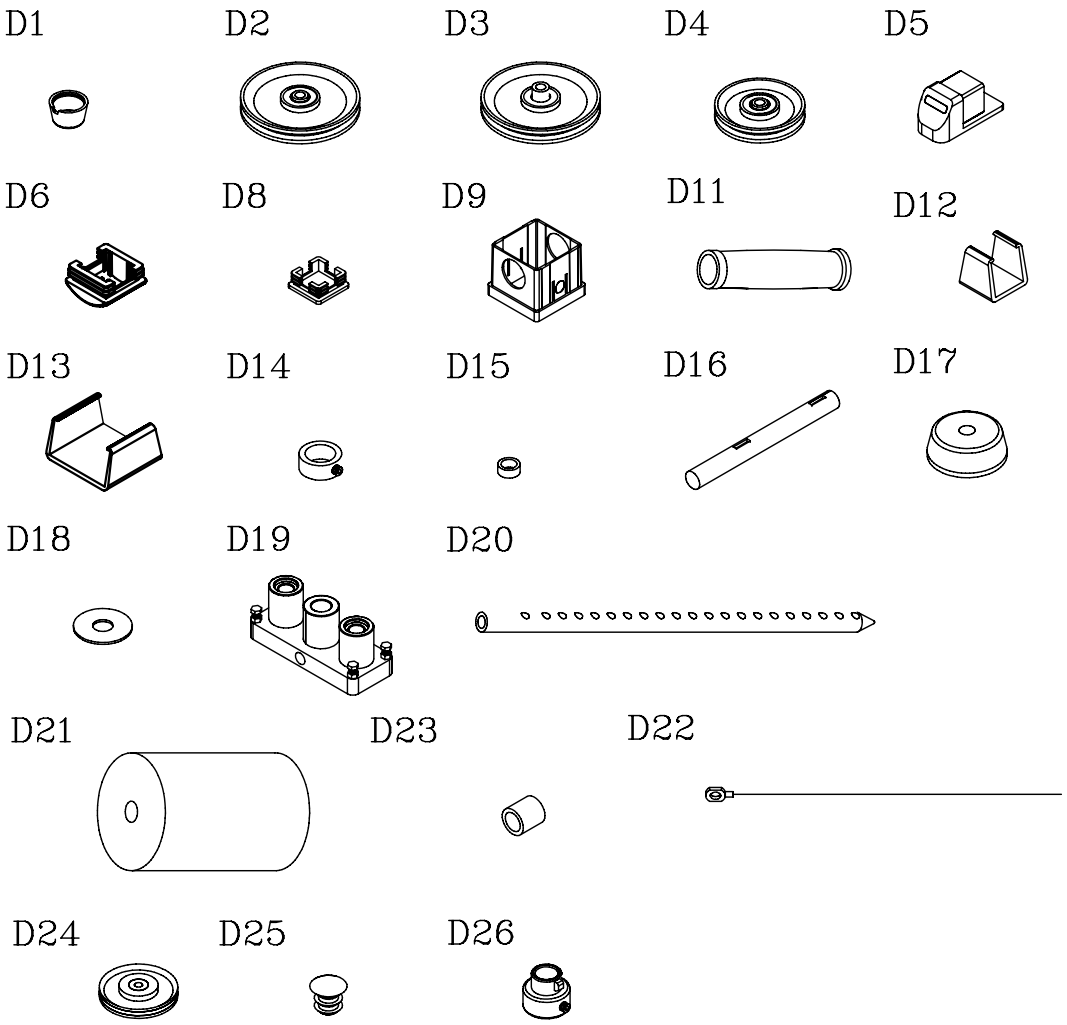

SMH-1500G.1 PARTS ILLUSTRATION SHEET

A [1PCS]

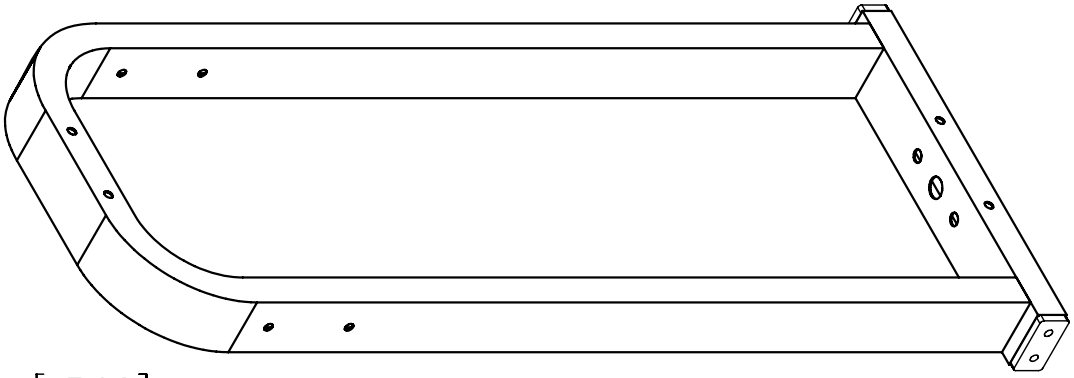

B [1PCS]

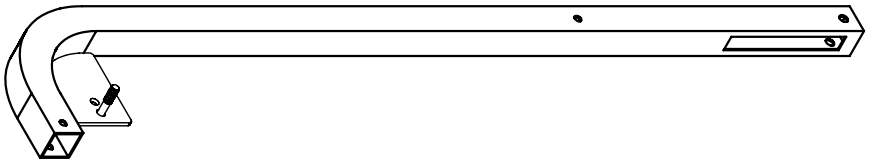

C [1PCS]

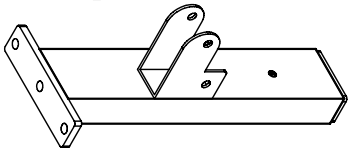

F [1PCS]

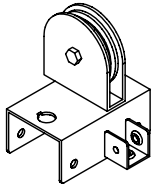

D [1PCS]

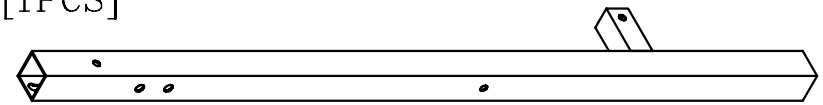

E [1PCS]

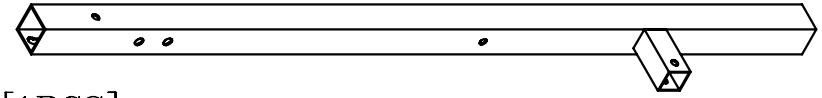

G [1PCS]

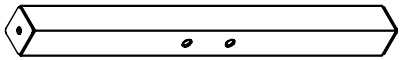

H [1PCS]

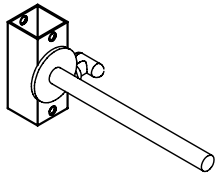

I [1PCS]

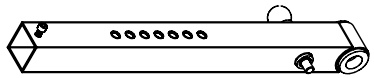

J1 [1PCS]

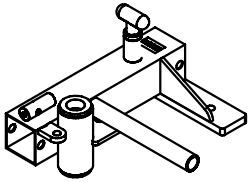

L1 [1PCS]

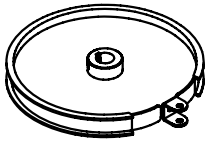

M [1PCS]

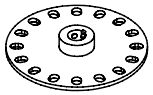

K [2PCS]

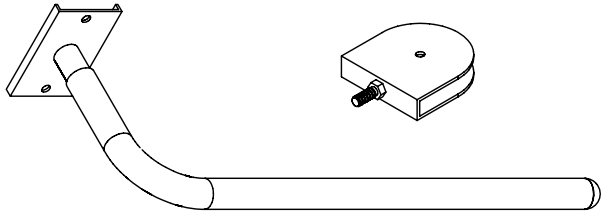

N [1PCS]

O [1PCS]

Q [2PCS]

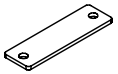

P [1PCS]

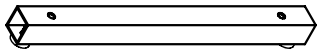

R [1PCS]

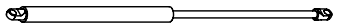

S [2PCS]

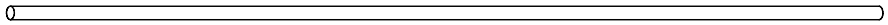

T [1PCS]

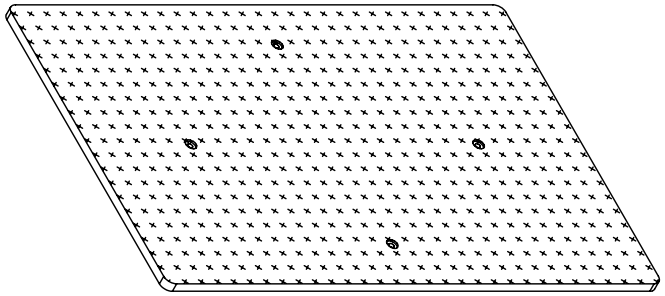

U [1PCS]

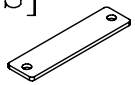

V [2PCS]

W [1PCS]

SMH-1500G.1

THERE IS A RISK ASSUMED BY INDIVIDUALS WHO USE THIS TYPE OF EQUIPMENT. TO MINIMIZE RISK, YOU MUST FOLLOW THESE RULES:

1. Inspect equipment before each workout. Checke that all nuts, bolts, screws and pop pins are in place and fully tightened. Also,before use,check cables for signs of wear. Replace all worn parts immediately. Never use machine if any parts are damaged or missing. Failure to follow these rules may result in serious injury.
2. Keep clear of the cables and all moving parts when the machine is in use.
3. Always make sure all Snap Links are closed when doing any cable/pulley exercises.
4. Exercise with care. Perform your exercises at a smooth moderate pace; never perform jerky or uncoordinated movements that may cause injury.
5. It is recommended that you should workout with a training partner.
6. Do not allow children or minors to play on or around this equipment.
7. If unsure of proper use of equipment, call your local Body-Solid distributor or the Body-Solid customer service department at 1-800-556-3113.
8. WARNING: Consult your physician before starting your exercise program. For your own safety. do not begin any exercise program without proper instruction.

RAL2-11-98

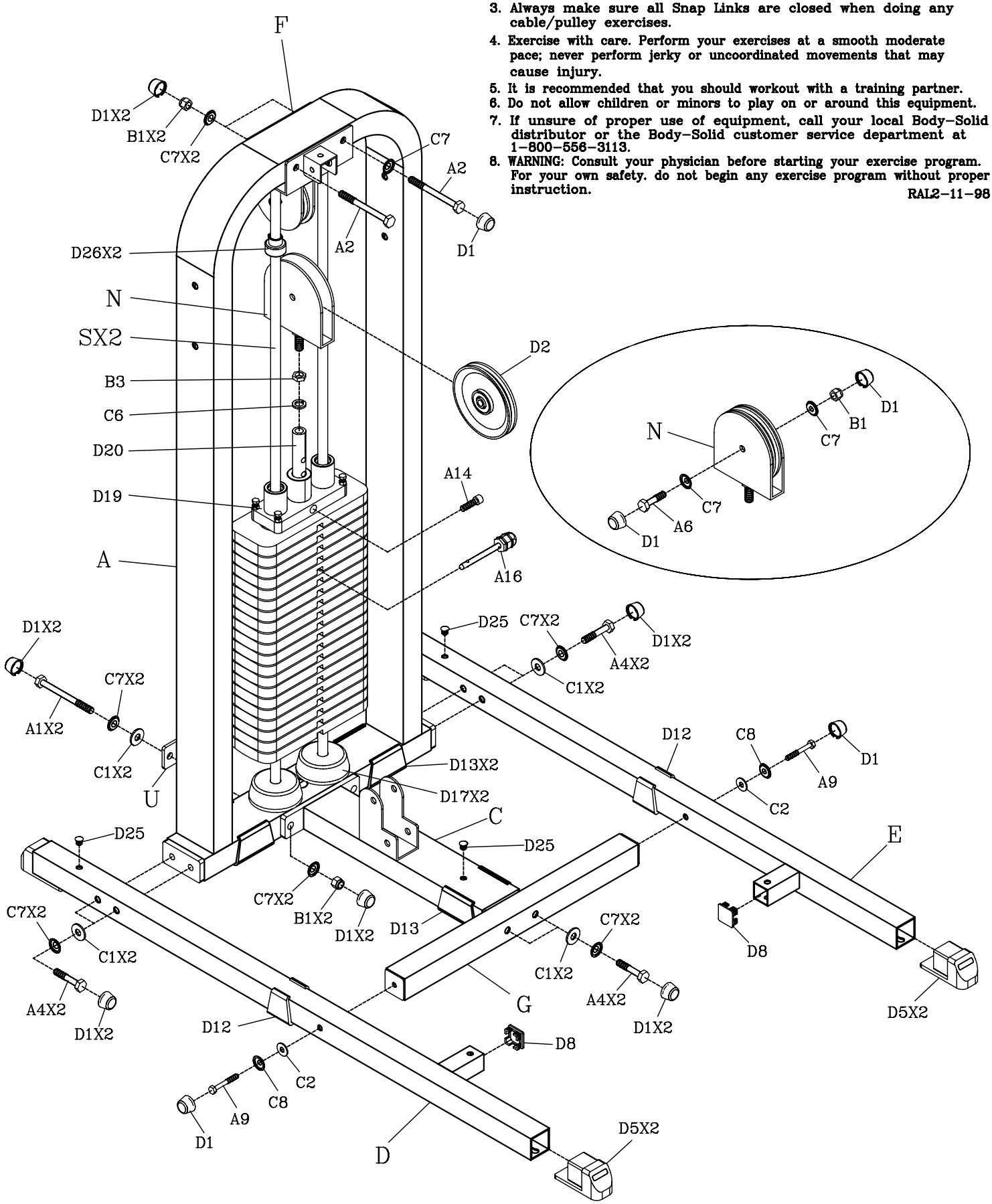

SMH-1500G.1

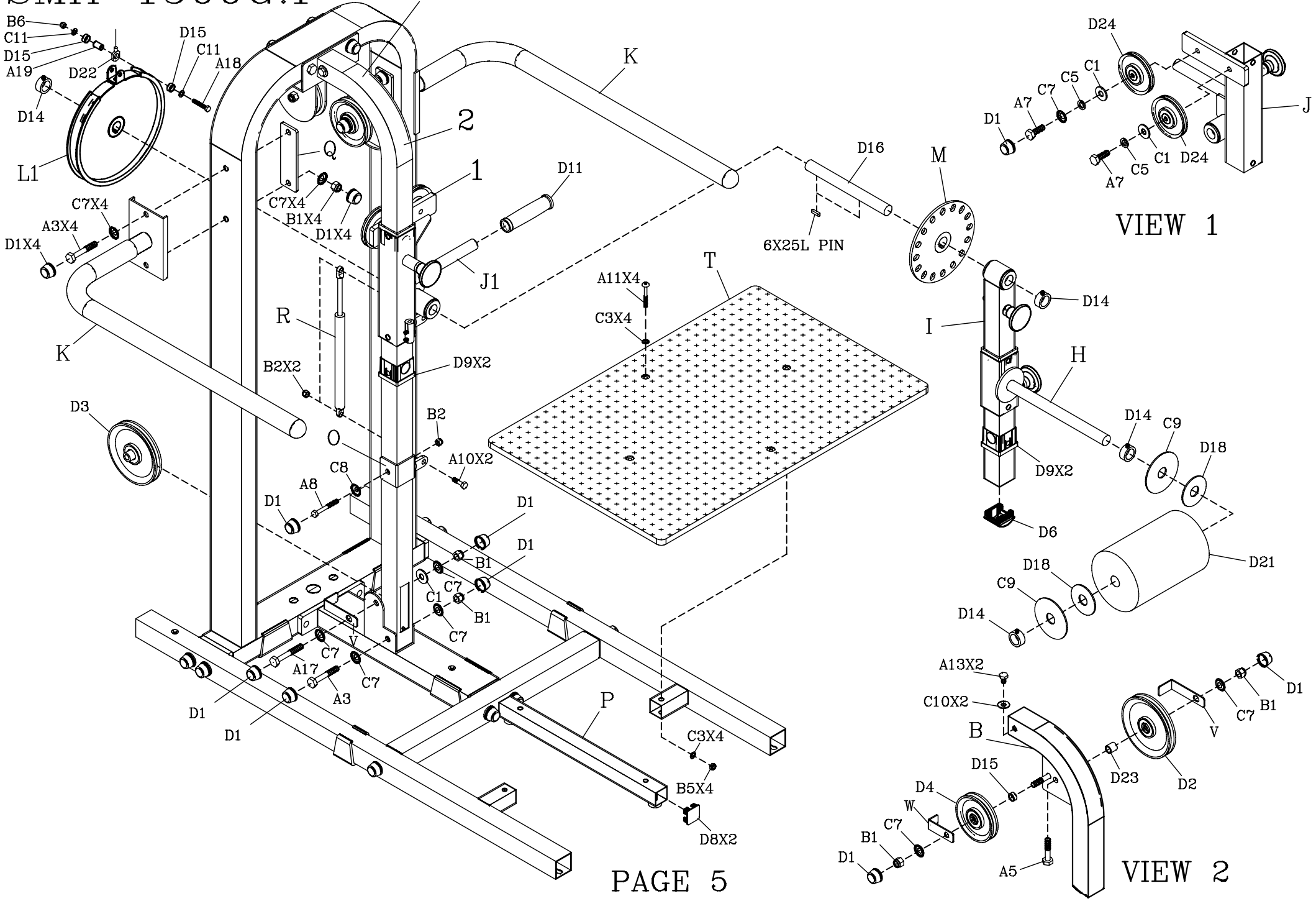
B6
C11
D15
A19
D22
D14
L1
D15
C11
A18
B
K
2
1
Q
C7X4
B1X4
D1X4
D11
C7X4
A3X4
D1X4
J1
K
R
B2X2
D9X2
D3
O
B2
A10X2
C8
A8
D1
D1
D1
B1
C7
C1
B1
C7
V
C7
A17
C7
A3
D1
D1
T
A11X4
C3X4
P
C3X4
B5X4
D8X2
D16
6X25L PIN
M
D24
C1
C5
C7
A7
D1
J
C1
D24
C5
A7
VIEW 1
D14
I
H
D14
C9
D18
D9X2
D6
D21
D18
C9
D14
A13X2
C10X2
B
D15
D4
W
C7
B1
D1
A5
D23
D2
V
C7
B1
D1
VIEW 2

SMH-1500G.1

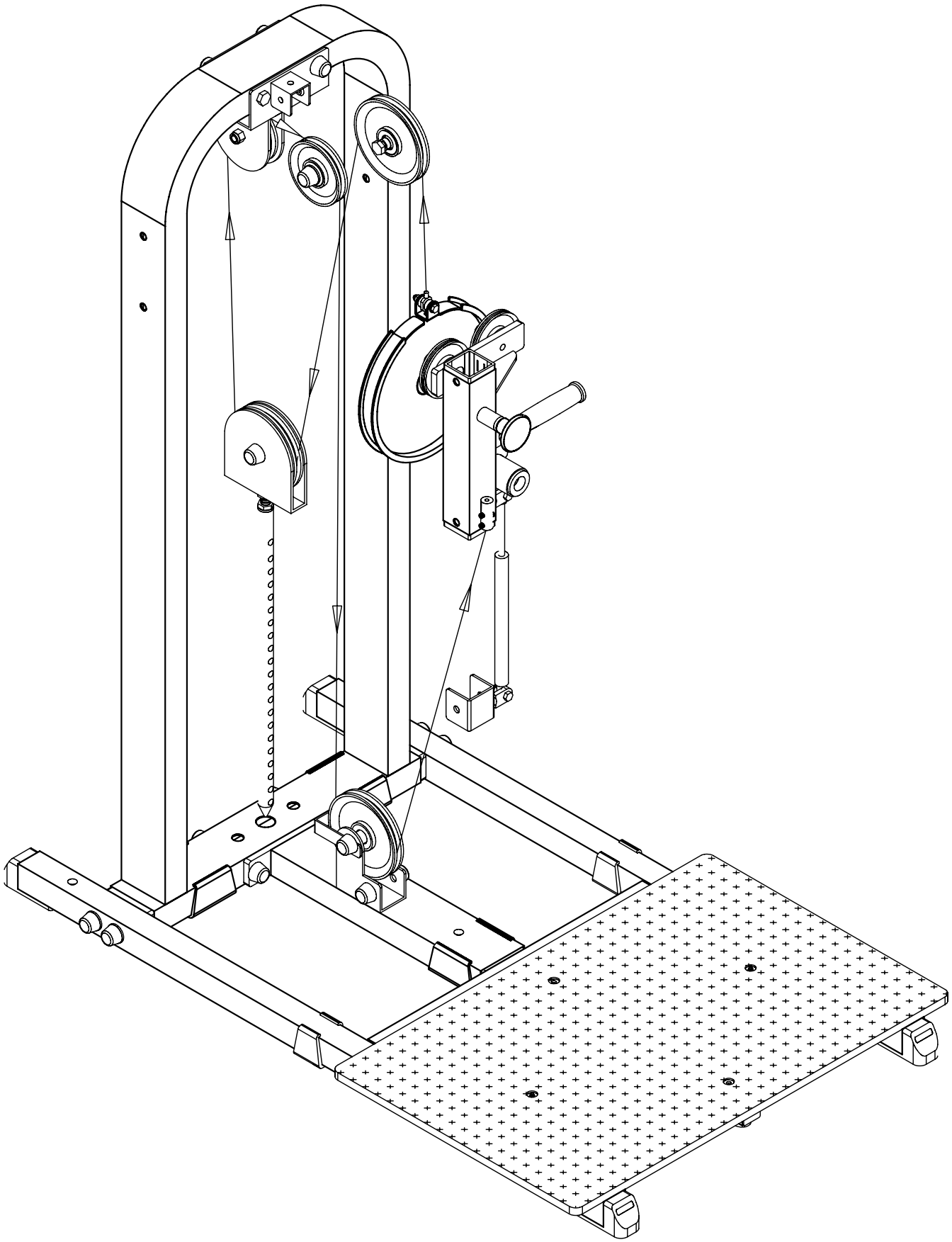
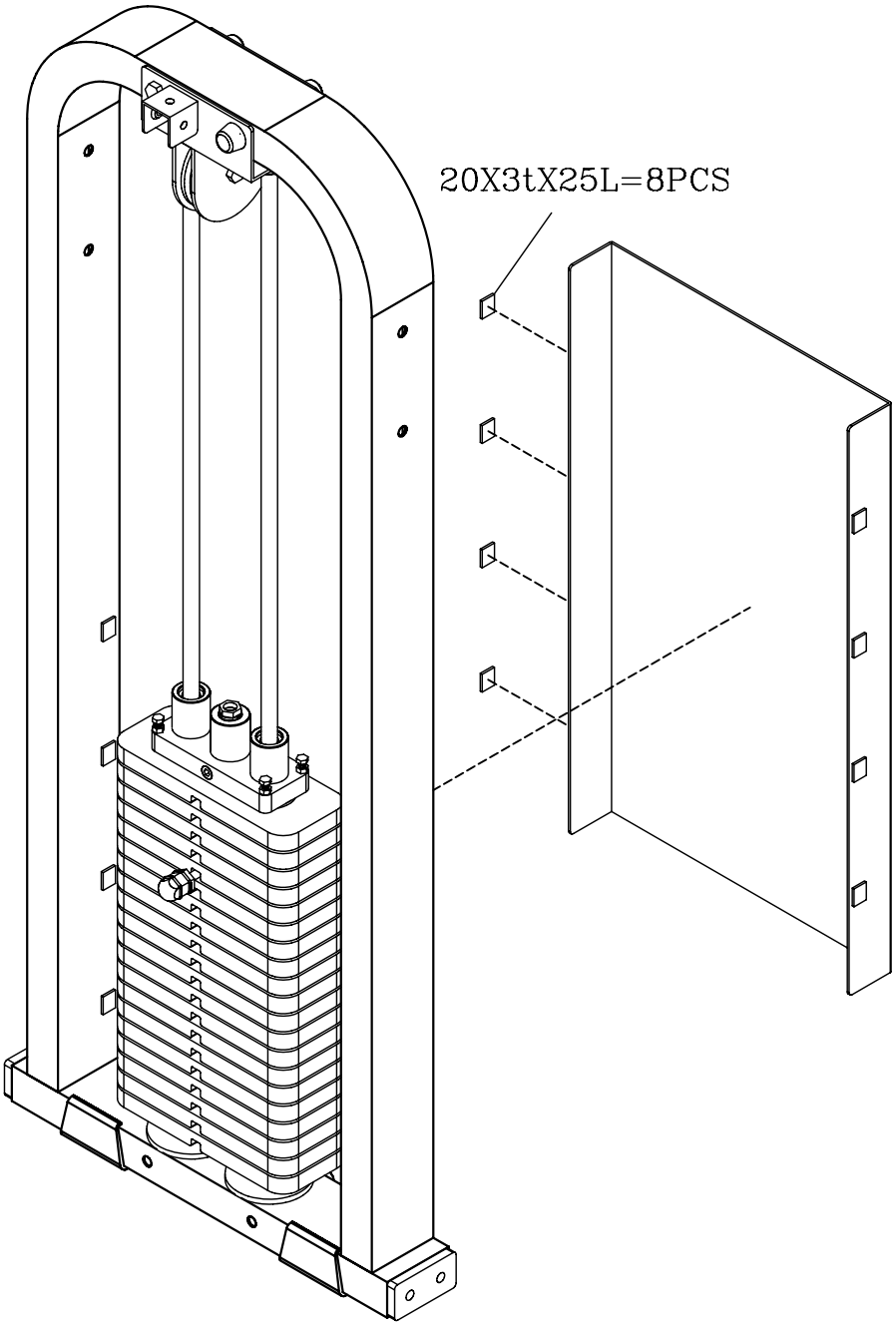
SMH-1500G.1