Инструкция

Регулируемая скамья складная Body Solid GFID225

Полезные ссылки:

Регулируемая скамья складная Body Solid GFID225 - смотреть на сайте

Body-Solid®

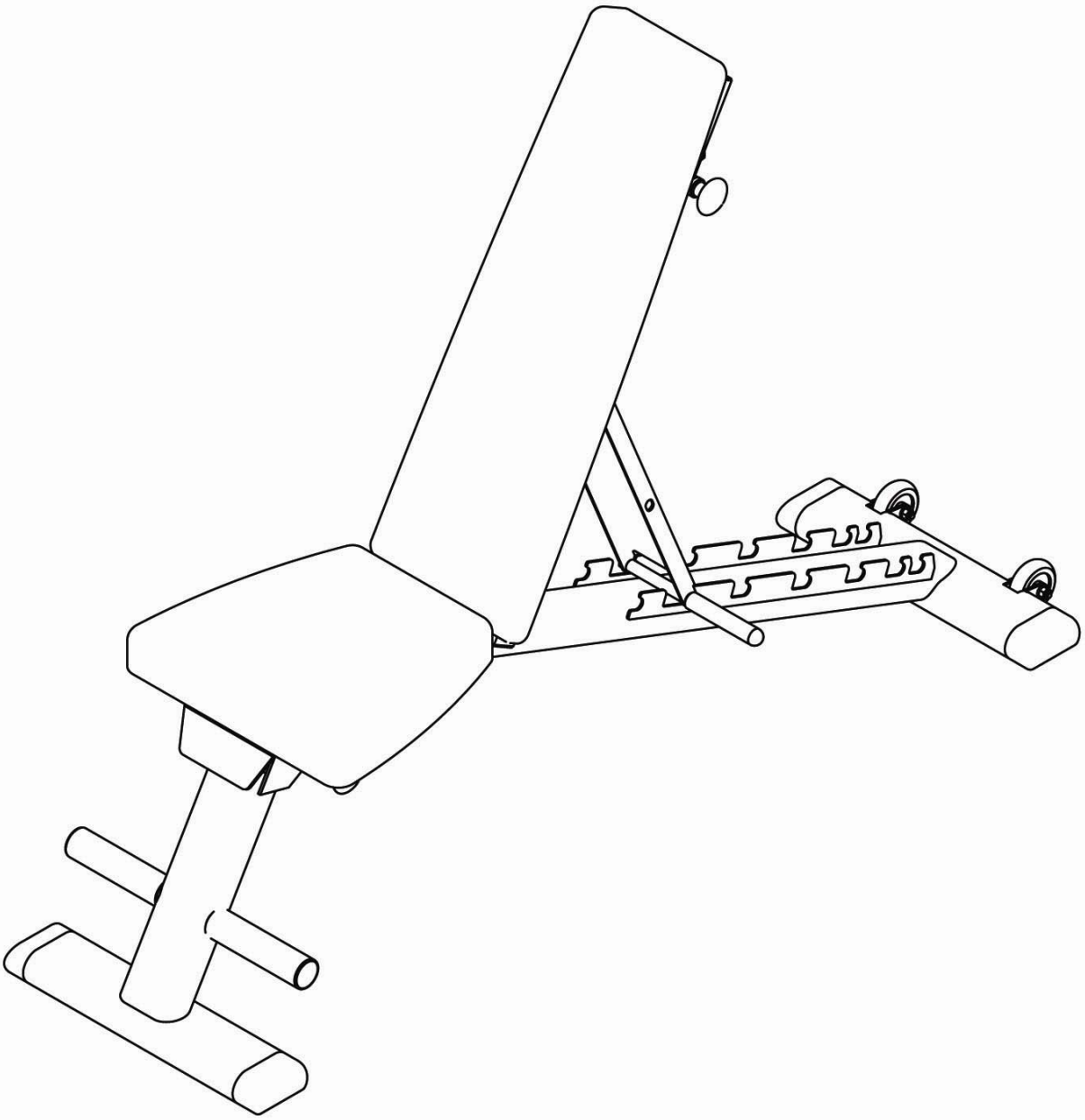

GFID225
ASSEMBLY INSTRUCTIONS

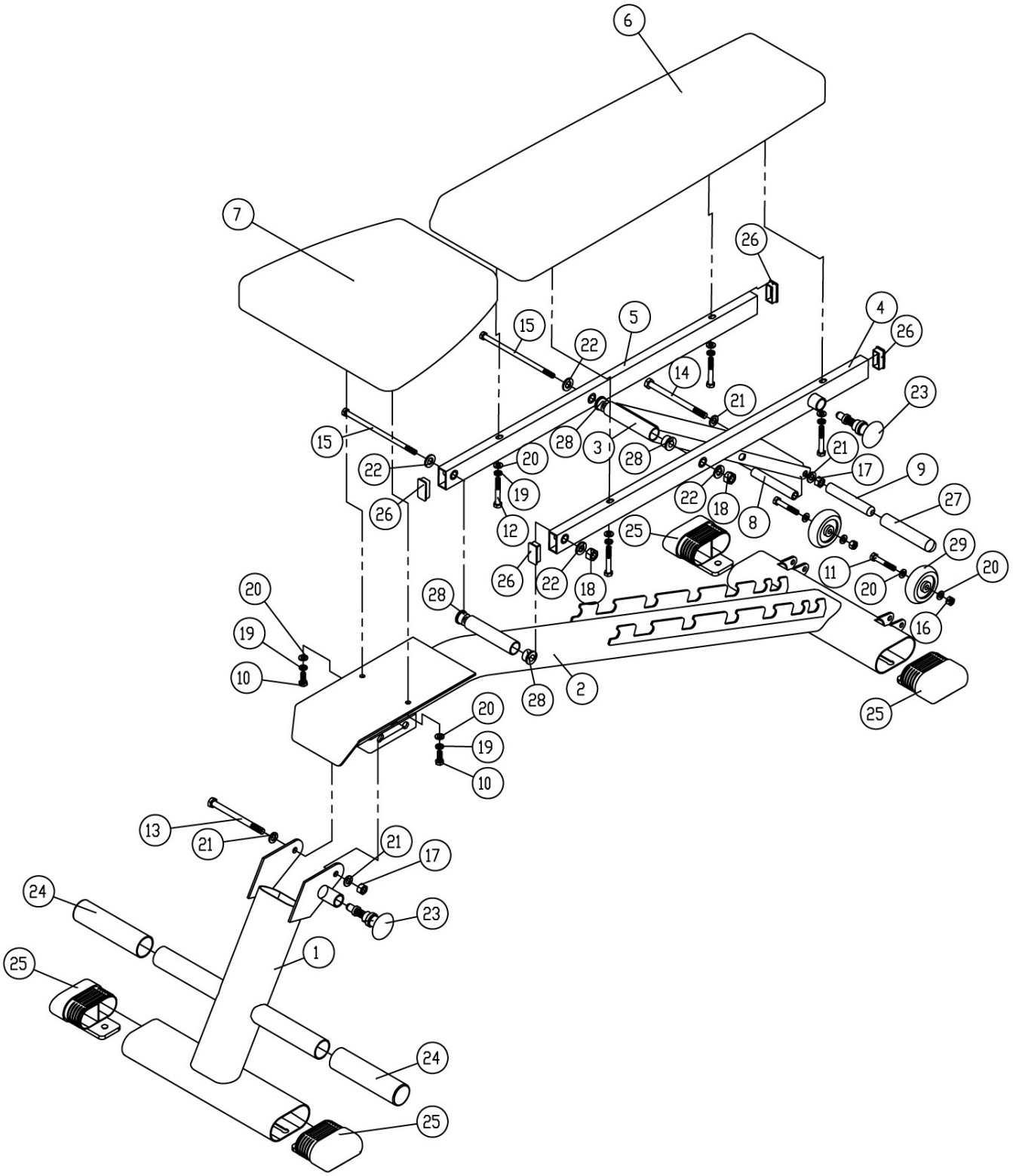
6
7
26
4
26
15
22
5
14
21
23
15
28
3
28
21
22
20
17
9
19
22
18
8
27
26
12
25
29
26
22
18
11
20
20
28
16
19
10
28
2
25
20
19
10
13
21
21
17
24
23
1
25
24
25

GFID225 Part List

No .	PART	QTY.
1	Folding Leg	1
2	Main Frame	1
3	Back Pad Adjuster	1
4	LEFT Back Pad Frame	1
5	RIGHT Back Pad Frame	1
6	Back Pad	1
7	Seat Pad	1
8	Nylon Spacer	1
9	HANDLE	1
10	Hex Head Bolt 5/16"X 3/4" Full thread	2
11	Hex Head Bolt 5/16"X 2" Partial thread	2
12	Hex Head Bolt 5/16"X 2 1/5" Partial thread	4
13	Hex Head Bolt 3/8"X5" Partial thread	1
14	Hex Head Bolt 3/8"X5 1/2" Partial thread	1
15	Hex Head Bolt 3 1/2"X6 4/5" Partial thread	2
16	5/16" Nylon Lock Nut	2
17	3/8" Nylon Lock Nut	2
18	1/2" Nylon Lock Nut	2
19	5/16" Spring Lock Washer	6
20	5/16"Washer	10
21	3/8"Washer	4
22	1/2" Washer	4
23	POUND POP PIN	2
24	1 1/2" Diameter X 6 1/2" Rubber Tubing	2
25	FOOT CAPS 4"X 2"	4
26	END CAP J40*20*2	4
27	RUBBER GRIP	1
28	STEEL BUSHING	4
29	WHEEL	2

BODY-SOLID
LIFETIME WARRANTY

Please consult your physician before using this product.

This Warranty applies only in the United States to products manufactured or distributed by Body-Solid, Inc. (Body-Solid) under the Body-Solid brand name. The warranty period to the original purchaser is lifetime of the original purchaser.

Body-Solid warrants that the Product you have purchased for non-commercial, personal, family, or household use from Body-Solid or from an authorized Body-Solid reseller is free from defects in materials or workmanship under normal use during the warranty period. Your sales receipt, showing the date of purchase of the Product, is your proof of the date of purchase. This warranty extends only to you, the original purchaser. It is not transferable to anyone who subsequently purchases the Product from you. It excludes expendable parts such as paint and finish (ie. scratched or chipped paint; scratched, chipped, peeling or flaking chrome; rust or corrosion). This Warranty becomes VALID ONLY if the Product is assembled / installed according to the instructions / directions included with the Product.

During the warranty period Body-Solid will at no additional charge, repair or replace (at Body-Solid's option) the Product if it becomes defective, malfunctions, or otherwise fails to conform with this Warranty under normal non-commercial, personal, family, or household use. In repairing the product Body-Solid may replace defective parts or, at the option of Body-Solid, serviceable used parts that are equivalent to new parts in performance. All exchanged parts and Products replaced under this warranty will become the property of Body-Solid. Body-Solid reserves the right to change manufacturers of any part to cover any existing warranty.

To obtain warranty service, you must return the Product to Body-Solid in its original container (or equivalent). You must pre-pay any shipping charges, export taxes, customs duties and taxes, or any other charges associated with transportation of the Product. In addition, you are responsible for insuring any Product shipped or returned. You assume the risk of loss during shipment. You must present Body-Solid with proof-of-purchase documents (including the date of purchase). Any evidence of alteration, erasing or forgery of proof -of-purchase documents will be cause to void this Warranty.

This Warranty does not extend to any Product not purchased from Body-Solid or from an authorized Body-Solid reseller. This Warranty does not extend to any Product that has been damaged or rendered defective; (a) as a result of accident, misuse, or abuse; (b) by the use of parts not manufactured or sold by Body-Solid; (c) by modification of the Product; (d) as a result of service by anyone other than Body-Solid, or an authorized Body-Solid warranty service provider. Should any product submitted for Warranty service be found to be ineligible, an estimate of repair cost will be furnished and the repair will be made if requested by you upon Body-Solid's receipt of payment.

EXCEPT AS EXPRESSLY SET FORTH IN THIS WARRANTY BODY-SOLID MAKES NO OTHER WARRANTIES, EXPRESSED OR IMPLIED INCLUDING ANY IMPLIED WARRANTIES OF MERCHANTABILITY AND FITNESS FOR A PARTICULAR PURPOSE. BODY-SOLID EXPRESSLY DISCLAIMS ALL WARRANTIES NOT STATED IN THIS WARRANTY. ANY IMPLIED WARRANTIES THAT MAY BE IMPOSED BY LAW ARE LIMITED TO THE TERMS OF THIS WARRANTY. NEITHER BODY-SOLID NOR ANY OF ITS AFFILIATES SHALL BE RESPONSIBLE FOR INCIDENTAL OR CONSEQUENTIAL DAMAGES. SOME STATES DO NOT ALLOW LIMITATIONS ON HOW LONG AN IMPLIED WARRANTY LASTS OR THE EXCLUSION OR LIMITATION OF INCIDENTAL OR CONSEQUENTIAL DAMAGES, SO THE ABOVE LIMITATIONS OR EXCLUSION MAY NOT APPLY TO YOU. This Warranty gives you specific legal rights and you may also have other rights that may vary from state to state. This is the only express warranty applicable to Body-Solid branded products. Body-Solid neither assumes nor authorizes anyone to assume for it any other express warranty.

Before returning a product you must call Body-Solid at 1-800-556-3113 to obtain a Return Authorization Number. No returns will be accepted without the Return Authorization Number. Original purchaser must pre-pay all freight charges on warranty claims. Body-Solid will not accept Freight Collect shipments or return shipments on a freight collect basis.

KEEP THIS HALF FOR YOUR RECORDS

LIFETIME WARRANTY
Registration Card

Congratulations! You have just purchased a quality Body-Solid product. You must fill out this Warranty Registration Card completely, sign it and return it to BODY-SOLID within 30 days of purchase for this warranty to be valid.

First Name | Initial | Last Name

Street | Apt. No.

City | State | Zip Code

Country | Phone

ITEM NO. _____

ITEM NAME _____

DATE OF PURCHASE _____

1. **Where did you purchase this product from?**

   _____

   _____

2. **Who will use this product?**

   ____ % Male ____ % Female

3. **Age of product user?**

   ☐ Under 24 ☐ 45-54
   ☐ 25-34 ☐ 55-64
   ☐ 35-44 ☐ Over 65

4. **Household Income?**

   ☐ Under $15,000 ☐ $45,000 - $60,000
   ☐ $15,000 - $30,000 ☐ $60,000 - $75,000
   ☐ $30,000 - $45,000 ☐ $75,000 Plus

5. **How did you learn of this product?**

   ☐ TV ☐ Friend
   ☐ Radio ☐ Print ad / Flyer
   ☐ In Store Display ☐ Catalog
   ☐ Salesperson ☐ Other_____

6. **Why did you choose our product?**

   ☐ Quality ☐ Brand Name
   ☐ Features ☐ Price / Value
   ☐ Appearance / Style ☐ Warranty
   ☐ Design / Function ☐ Other_____

CAUTION • PLEASE NOTE • WARNING

THERE IS A RISK ASSUMED BY INDIVIDUALS WHO USE THIS TYPE OF EQUIPMENT. TO MINIMIZE RISK, YOU MUST FOLLOW THESE RULES:

1. Inspect equipment before each workout. Check that all nuts, bolts, screws and pop pins are in place and fully tightened. Also, before use, check cables for signs of wear. Replace all worn parts immediately. Never use machine if any parts are damaged or missing. Failure to follow these rules may result in serious injury.
2. Keep clear of the cables and all moving parts when the machine is in use.
3. Always make sure all Snap Links are closed when doing any cable / pulley exercises.
4. Exercise with care. Perform your exercises at a smooth moderate pace; never perform jerky or uncoordinated movements that may cause injury.
5. It is recommended that you should workout with a training partner.
6. Do not allow children or minors to play on or around this equipment.
7. If unsure of proper use of equipment, call your local Body-Solid distributor or the Body-Solid customer service department at 1-800-556-3113.
8. WARNING: Consult your physician before starting your exercise program. For your own safety, do not begin any exercise program without proper instruction.

Please sign:

_____

Signature

Body-Solid

LIFETIME WARRANTY Registration Card

See Details On Back.

You must complete and return Registration Card to Body-Solid within 30 days for this Warranty to be valid.

FROM:

Name: _____

Address: _____ Apt#: _____

City: _____ State: _____ Zip Code: _____

PLACE STAMP HERE

BODY-SOLID, Inc.

1900 Des Plaines Avenue

Forest Park, IL 60130 USA

IMPORTANT!

Lifetime Warranty Registration Card