Инструкция

Скамья Body Solid GFID71 регулируемая

Полезные ссылки:

Скамья Body Solid GFID71 регулируемая - смотреть на сайте

Скамья Body Solid GFID71 регулируемая - читать отзывы

GFID-71

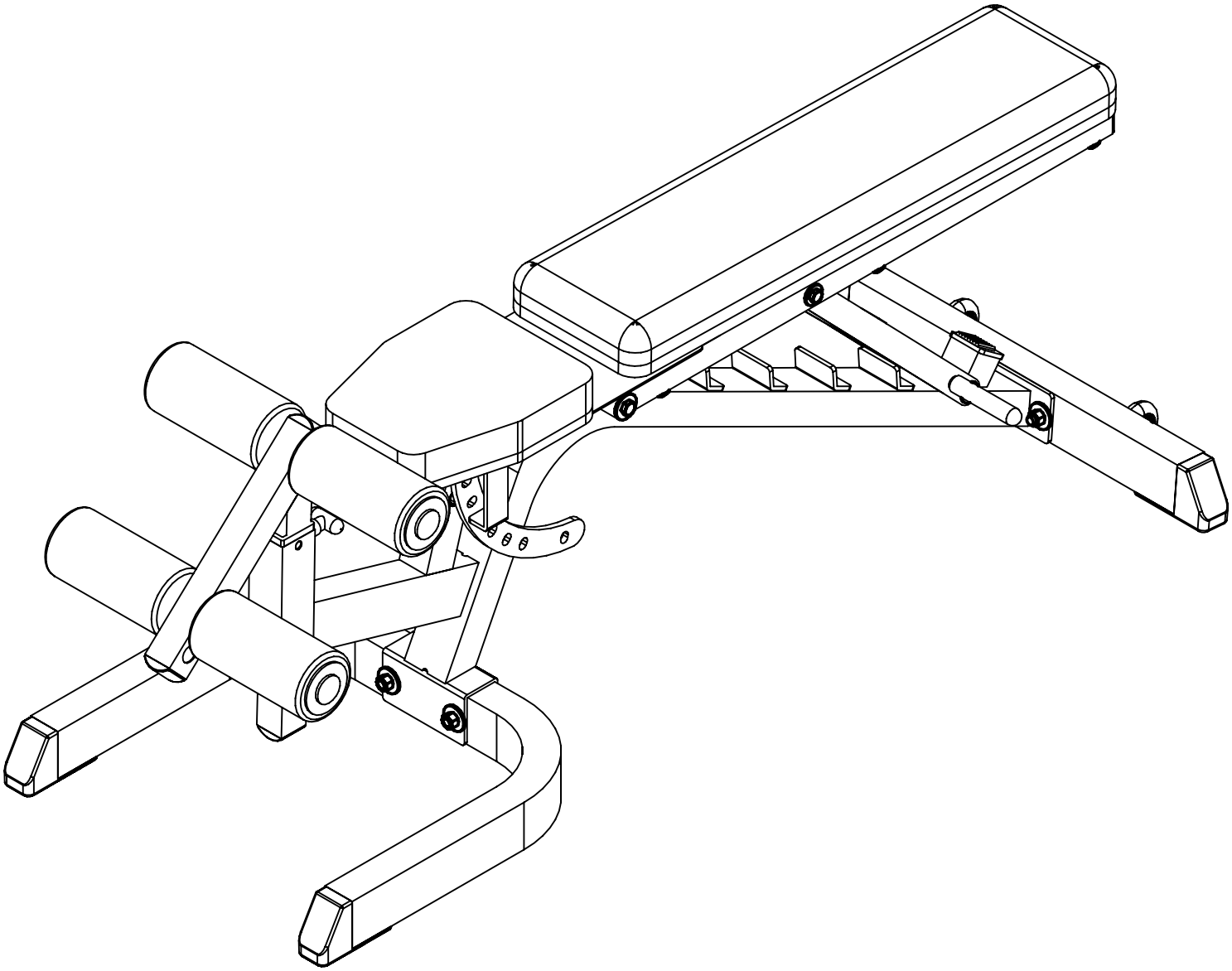

VERSION 0506

GFID-71 HARDWARE ILLUSTRATION SHEET

	Qyt.
A1. M12X80 HEX HEAD BOLT	[4PCS]
A2. 5/16"X2 1/4" HEX HEAD BOLT	[6PCS]
A3. 5/16"X1" HEX HEAD BOLT	[4PCS]
A4. M8X45 HEX HEAD BOLT	[2PCS]
B1. M12 NYLON LOCK NUT	[4PCS]
B2. M8 NYLON LOCK NUT	[2PCS]
C1. 5/16"(I.D) WASHER	[10PCS]
C2. 5/16" SPRING WASHER	[10PCS]
C3. M12(I.D) WASHER	[8PCS]
C4. M8(I.D) WASHER	[4PCS]
D1. ø1" ROUND END CAP (8341-033)	[4PCS]
D2. 60X45 NYLON BUSHING (9211-032)	[1PCS]
D3. 45X45 END CAP (9211-091)	[3PCS]
D4. 60X45 NYLON BUSHING (9211-047)	[1PCS]
D5. 2"X2"X1.8 END CAP (9211-087)	[1PCS]
D6. 20X40 END CAP (9211-008)	[2PCS]
D7. FOAM ROLLER (9161-009)	[4PCS]
D8. ø3" NYLON WASHER (9214-008)	[4PCS]
D9. 2"X3" FOOT CAP (9211-048)	[4PCS]
D10. 38X38 RUBBER BAR CATCH (9310-001)	[1PCS]
D11. ø64 PULLEY (9213-023)	[2PCS]

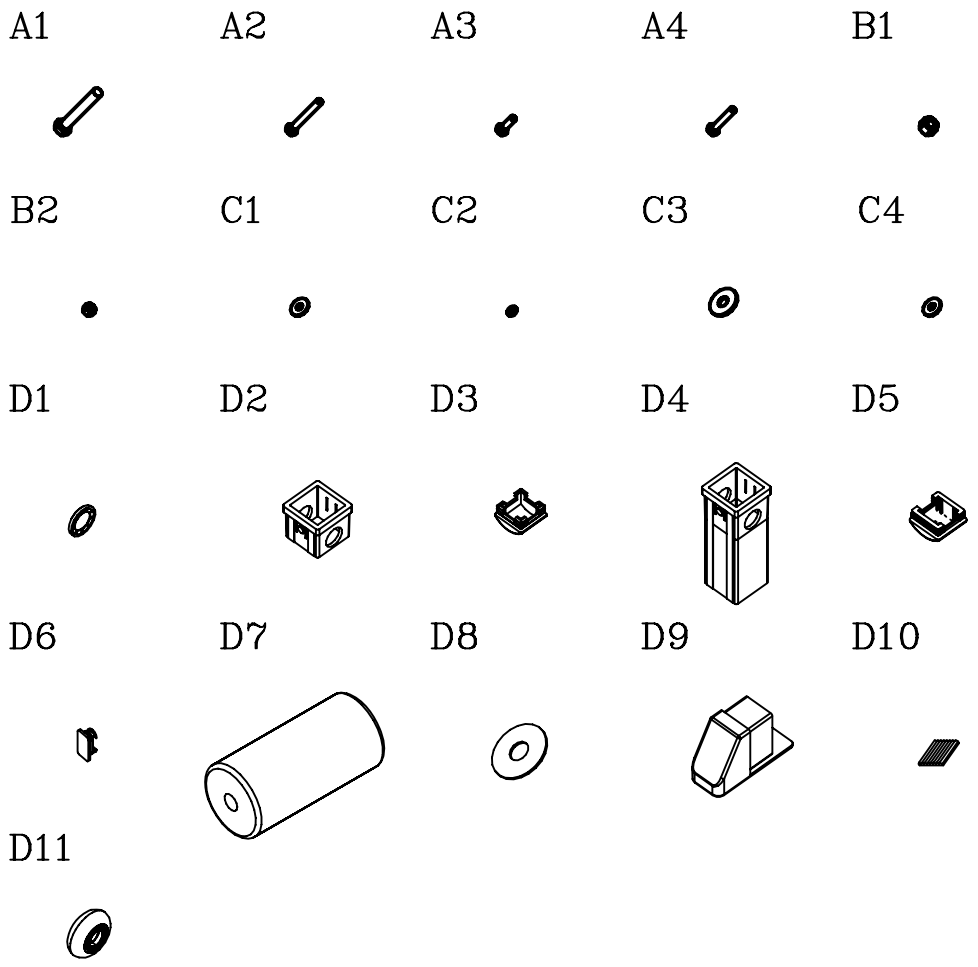

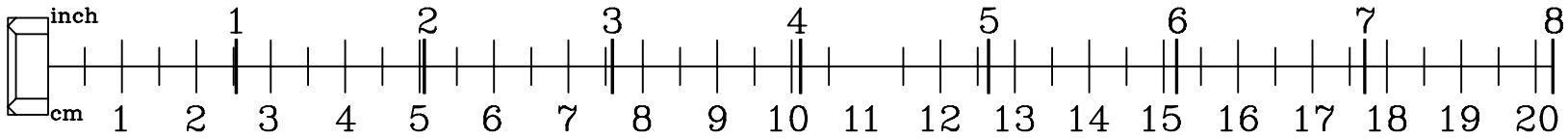

GFID-71 PARTS ILLUSTRATION SHEET

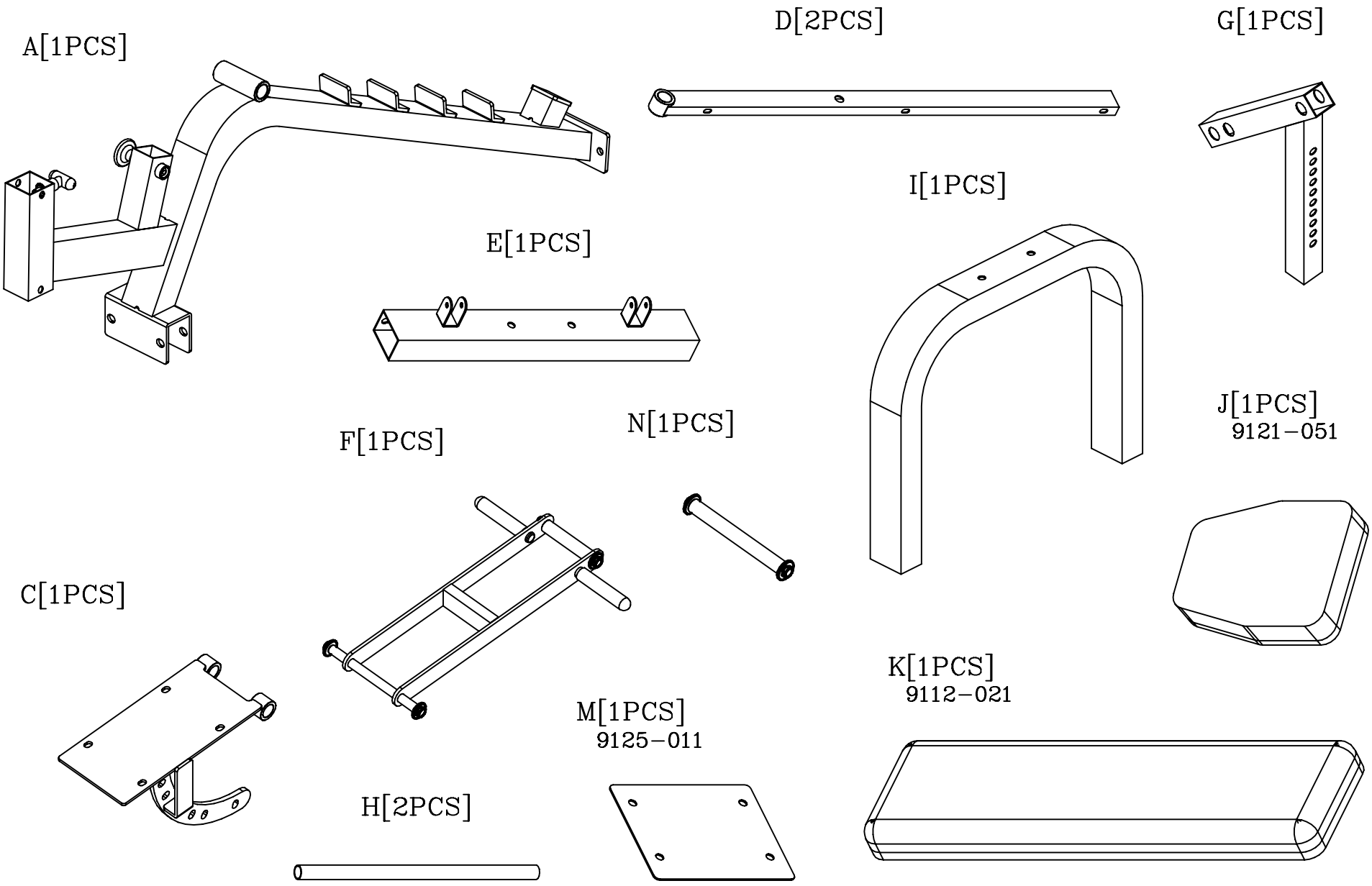

GFID-71

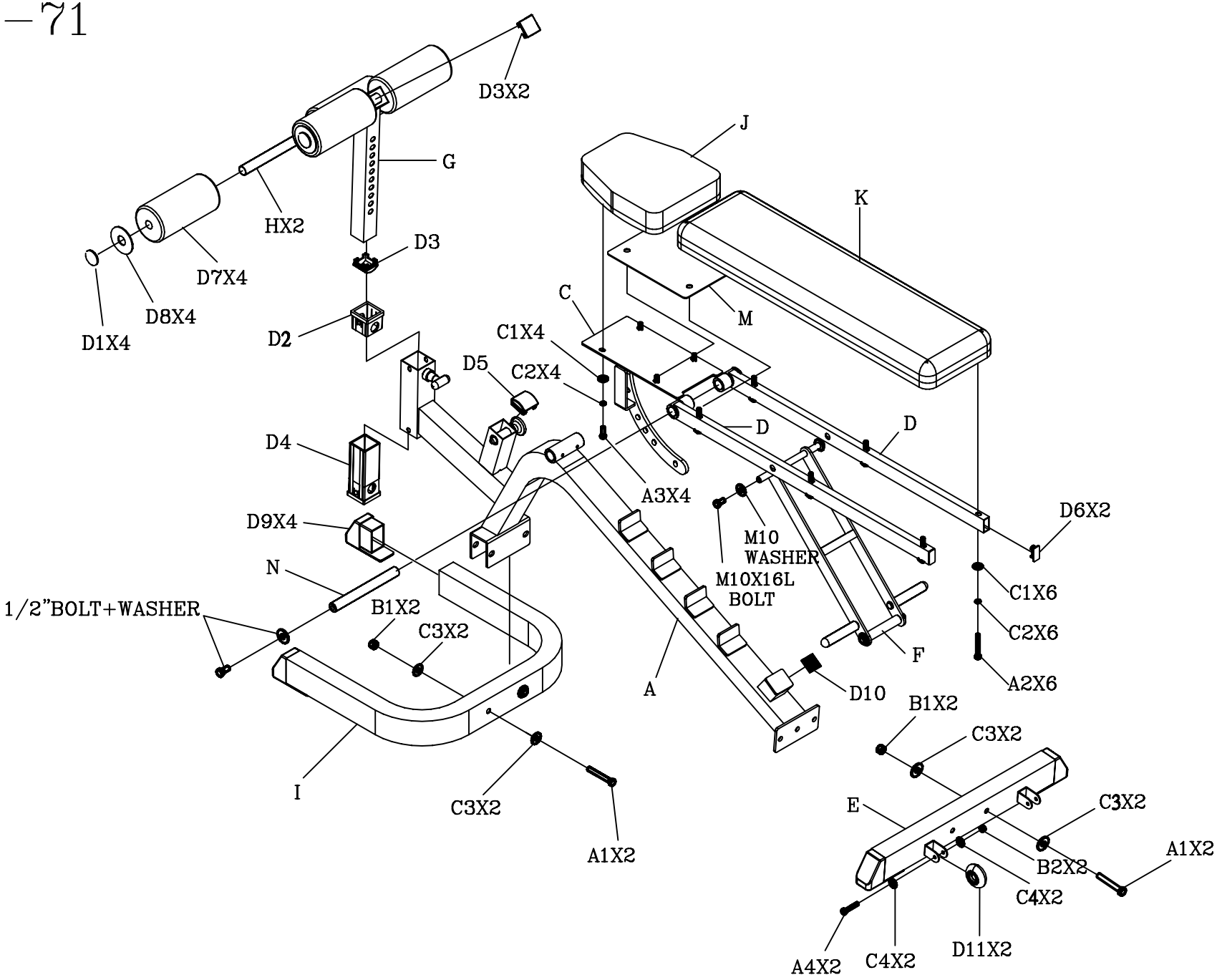
D3X2
G
J
K
HX2
D3
D7X4
D8X4
D1X4
D2
C
M
C1X4
D5
C2X4
D
D
D4
A3X4
D6X2
D9X4
M10
WASHER
M10X16L
BOLT
N
C1X6
1/2"BOLT+WASHER
B1X2
C3X2
C2X6
F
A2X6
A
D10
B1X2
C3X2
I
C3X2
E
C3X2
A1X2
B2X2
A1X2
C4X2
A4X2
C4X2
D11X2