Инструкция

Скамья Body Solid POB44 универсальная для жима

Полезные ссылки:

Скамья Body Solid POB44 универсальная для жима - смотреть на сайте

POB-44

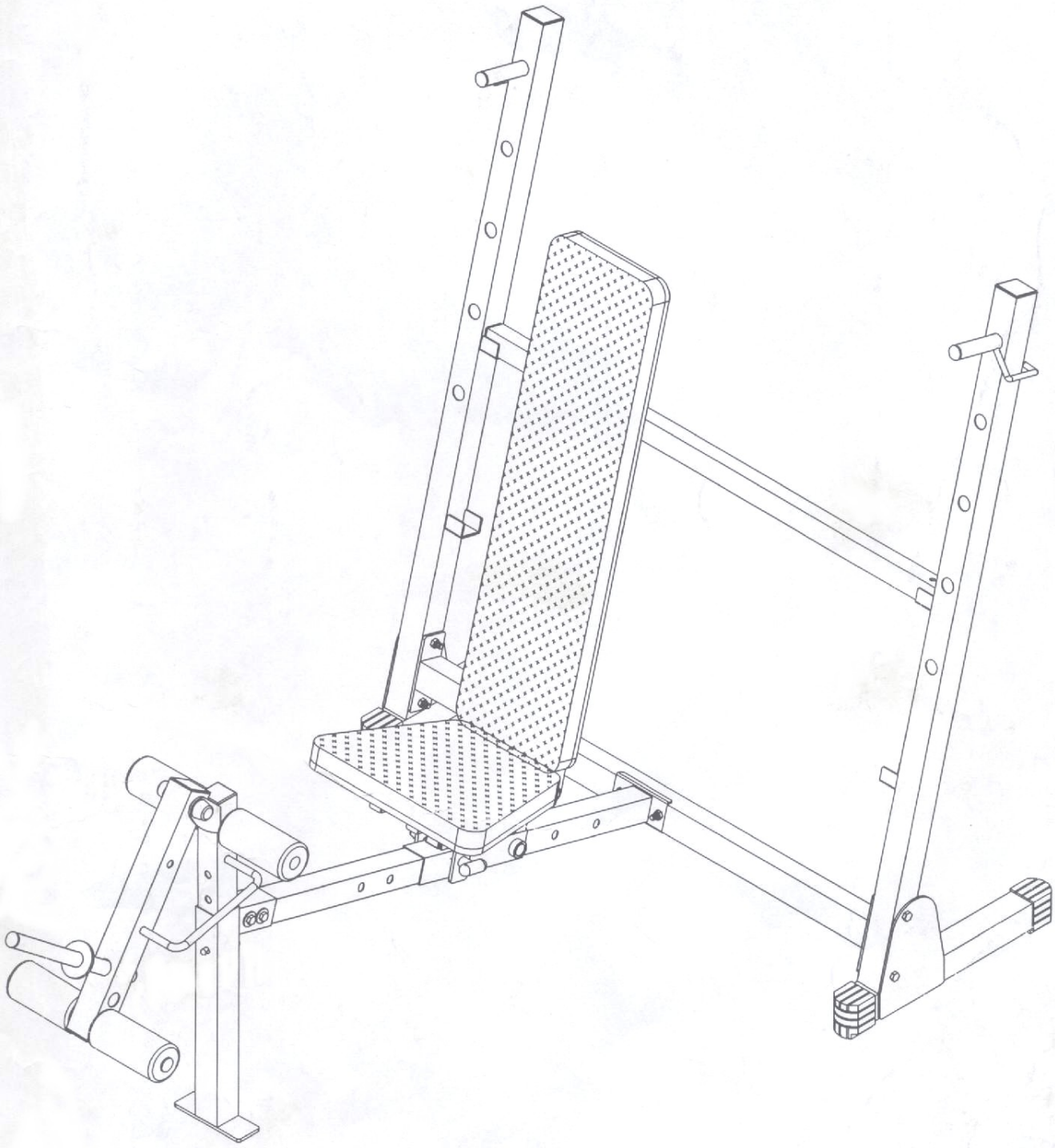

VERSION 0003

POB-44 HARDWARE ILLUSTRATION SHEET

	Qty.
A1. M10X70 HEX HEAD BOLT	[4PCS]
A2. M10X75 HEX HEAD BOLT	[4PCS]
A3. 1/2"X85 HEX HEAD BOLT	[1PCS]
A4. 5/16"X45 HEX HEAD BOLT	[10PCS]
B1. 1/2" NYLON LOCK NUT	[1PCS]
B2. M10 NYLON LOCK NUT	[8PCS]
C1. M8 SPRING WASHER	[10PCS]
C2. 1/2" ROUND END WASHER	[2PCS]
C3. M8 (I.D.) WASHER	[10PCS]
C4. M10 (I.D.) WASHER	[6PCS]
D1. P.V.C. BOLT CAP	[2PCS]
D2. 2"X2" END CAP (9211-005)	[4PCS]
D3. 1 1/2"X1 1/2" END CAP (9211-003)	[2PCS]
D4. 1 3/16"X1 3/16" END CAP (9211-002)	[2PCS]
D5. 1"X1" END CAP (9211-001)	[4PCS]
D6. 1 3/4"X1 3/4" END CAP (9211-004)	[1PCS]
D7. ø1" ROUND END CAP (9211-016)	[9PCS]
D8. ø1" RUBBER CANE CAP (9212-019)	[1PCS]
D9. QUICK RELEASE RING PIN (8250-015)	[1PCS]
D10. QUICK RELEASE BALL PIN (8250-017)	[1PCS]
D11. SAFETY HOOK (8240-022)	[1PCS]
D12. 2"X2" FOOT CAP (9212-003)	[4PCS]

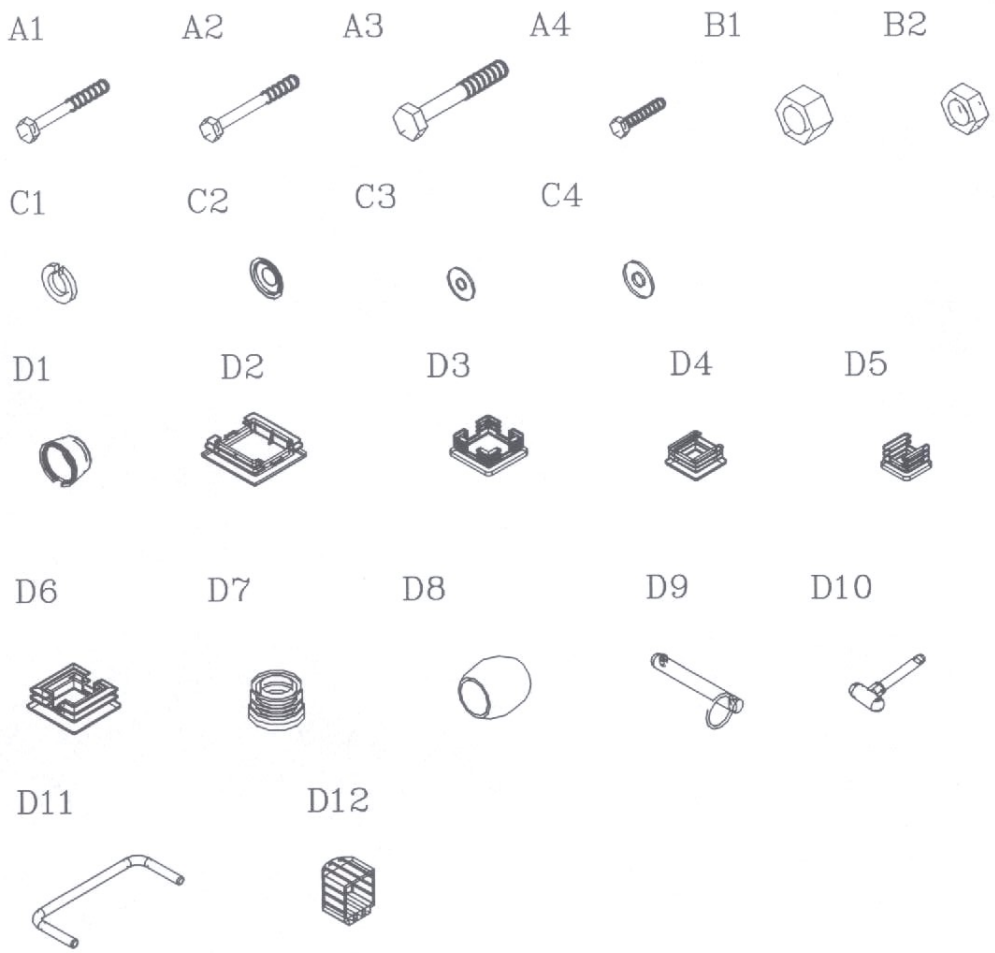

POB-44 PARTS ILLUSTRATION SHEET

A-1 [1PCS]

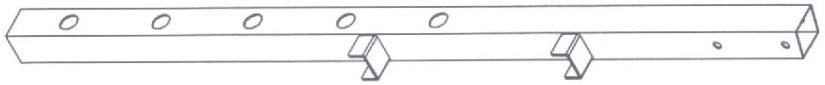

A-2 [1PCS]

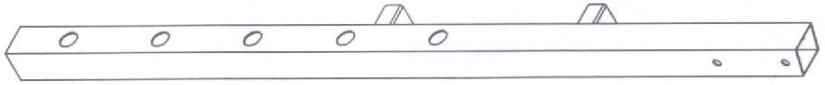

B-1 [1PCS]

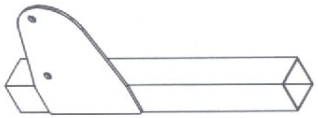

E [1PCS]

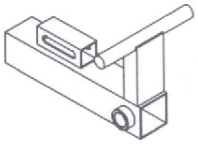

B-2 [1PCS]

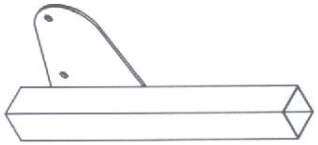

F [2PCS]

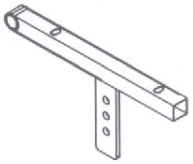

C [1PCS]

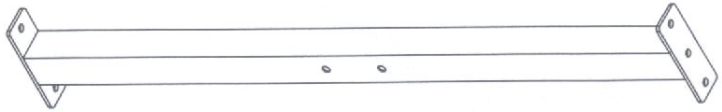

D [1PCS]

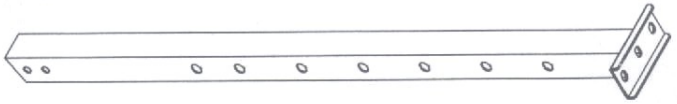

G [2PCS]

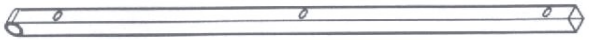

H [2PCS]

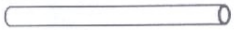

I [1PCS]

J [1PCS]

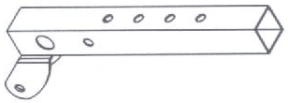

K [1PCS]

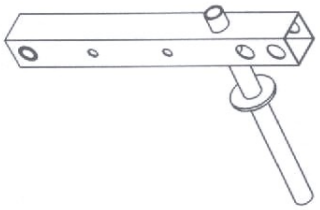

L [1PCS]

M [1PCS]

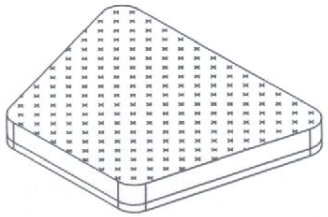

N [1PCS]

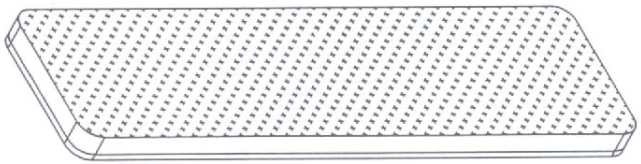

O [1PCS]

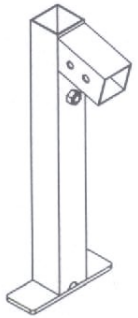

P [4PCS]

Q [1PCS]

POB-44

THERE IS A RISK ASSUMED BY INDIVIDUALS WHO USE THIS TYPE OF EQUIPMENT. TO MINIMIZE RISK, YOU MUST FOLLOW THESE RULES:

1. Inspect equipment before each workout. Checke that all nuts, bolts, screws and pop pins are in place and fully tightened. Also,before use,check cables for signs of wear. Replace all worn parts immediately. Never use machine if any parts are damaged or missing. Failure to follow these rules may result in serious injury.
2. Keep clear of the cables and all moving parts when the machine is in use.
3. Always make sure all Snap Links are closed when doing any cable/pulley exercises.
4. Exercise with care. Perform your exercises at a smooth moderate pace; never perform jerky or uncoordinated movements that may cause injury.
5. It is recommended that you should workout with a training partner.
6. Do not allow children or minors to play on or around this equipment.
7. If unsure of proper use of equipment, call your local Body-Solid distributor or the Body-Solid customer service department at 1-800-556-3113.
8. WARNING: Consult your physician before starting your exercise program. For your own safety. do not begin any exercise program without proper instruction.

RAL2-11-98

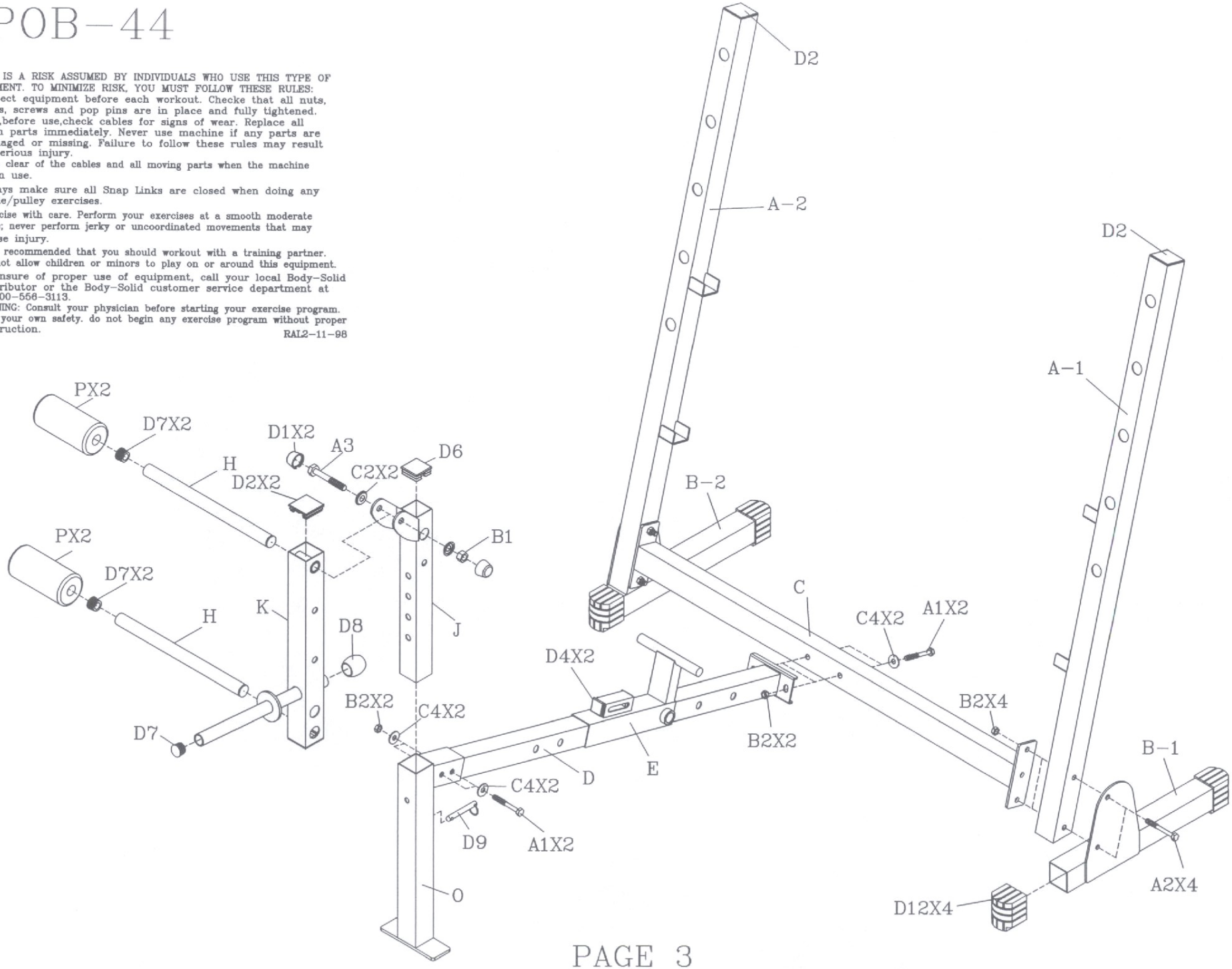

POB-44

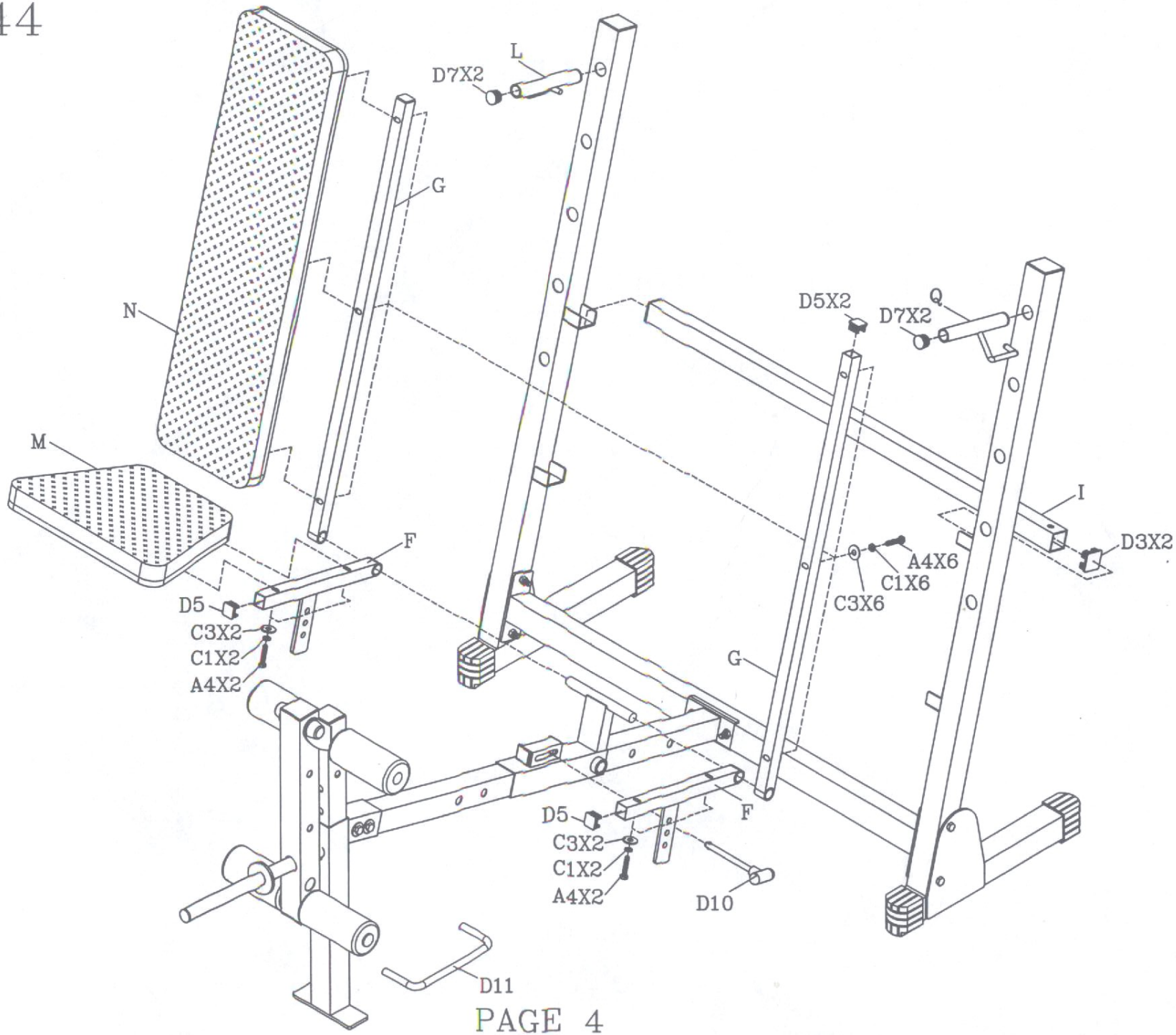
L
D7X2
G
N
M
D5X2
D7X2
Q
I
D3X2
A4X6
C1X6
C3X6
F
D5
C3X2
C1X2
A4X2
G
D5
C3X2
C1X2
A4X2
F
D10
D11