Инструкция

Скамья для ног Body Solid GLCE-365

Полезные ссылки:

Скамья для ног Body Solid GLCE-365 - смотреть на сайте

GLCE-365

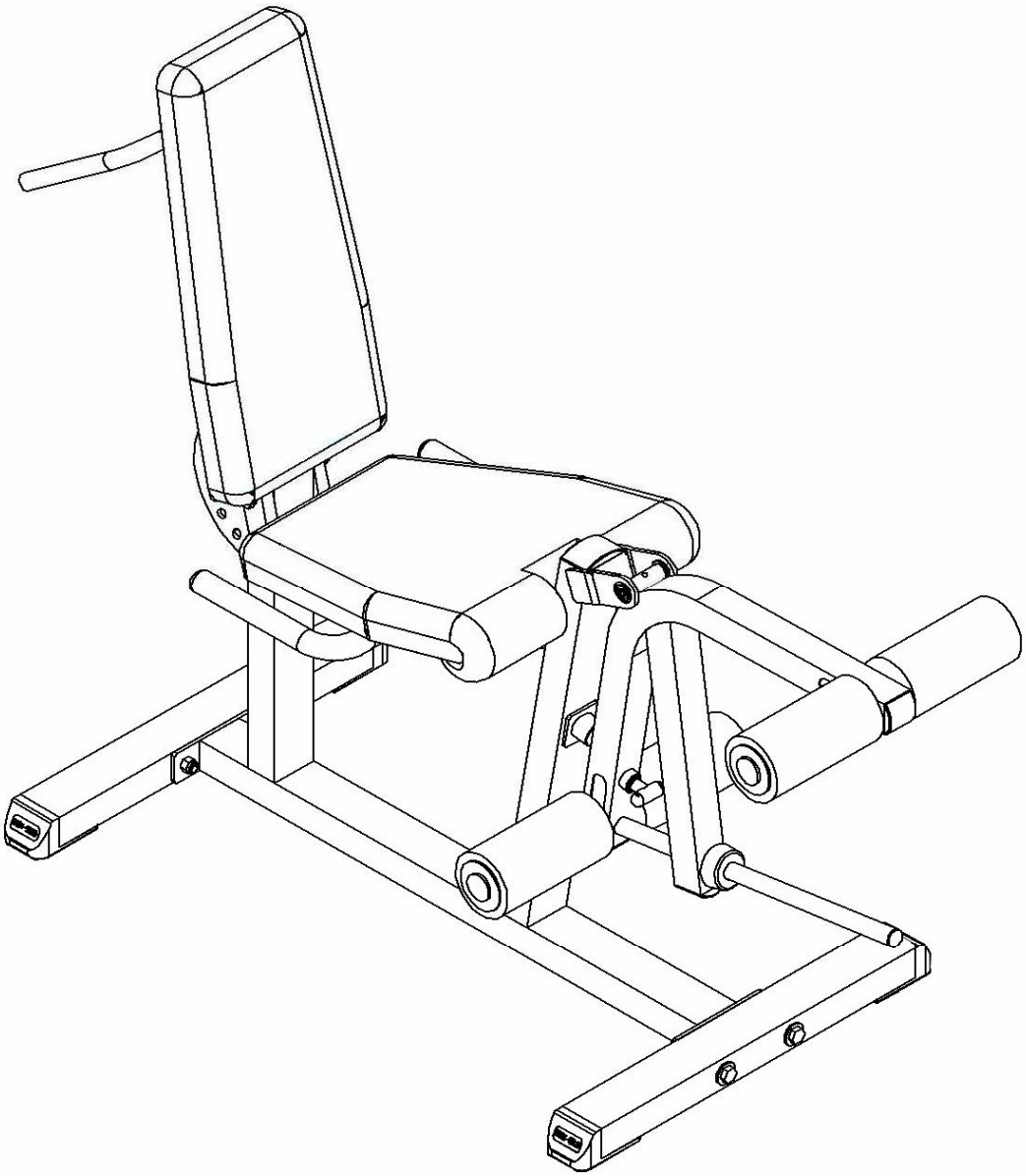

VERSION 0507

GLCE-365 PARTS ILLUSTRATION SHEET

A [1PCS]

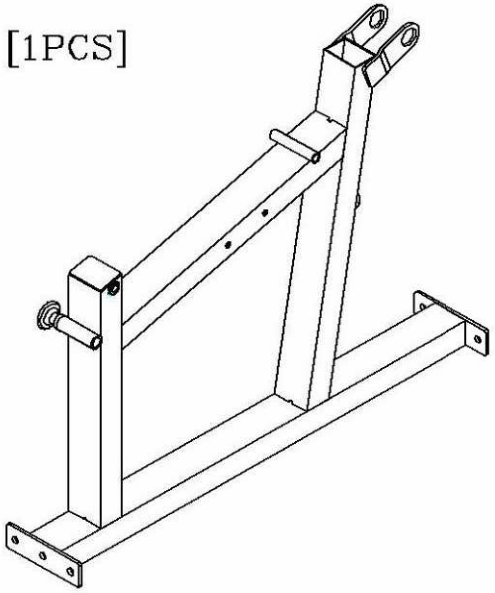

B [1PCS]

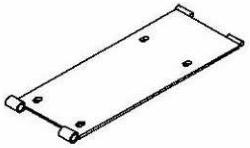

C [1PCS]

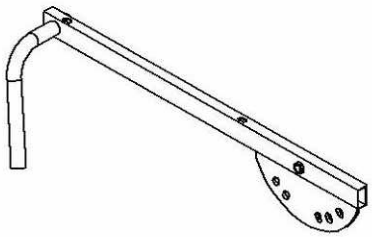

D [1PCS]

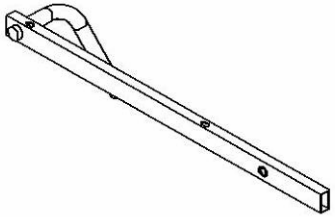

E [1PCS]

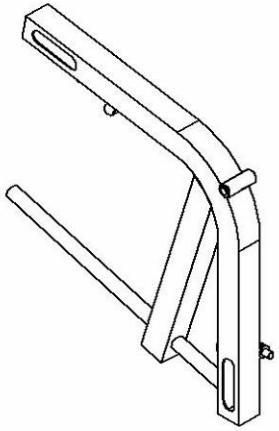

F [1PCS]

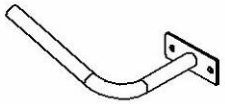

G [2PCS]

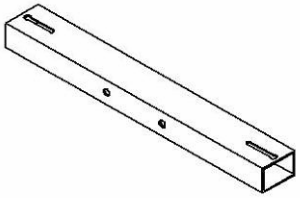

H [2PCS]

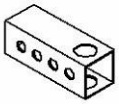

I [2PCS]

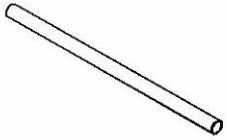

L [1PCS]
9112-016

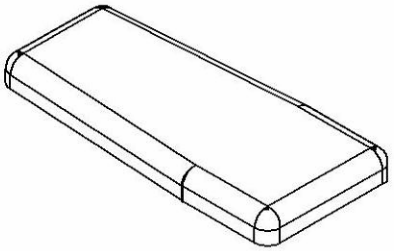

K [1PCS]
9122-028

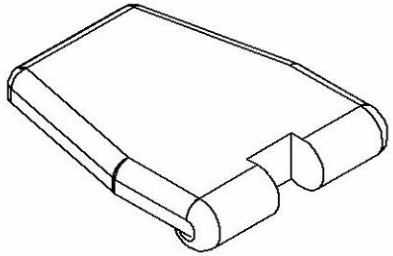

J [1PCS]

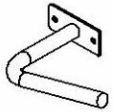

GLCE-365

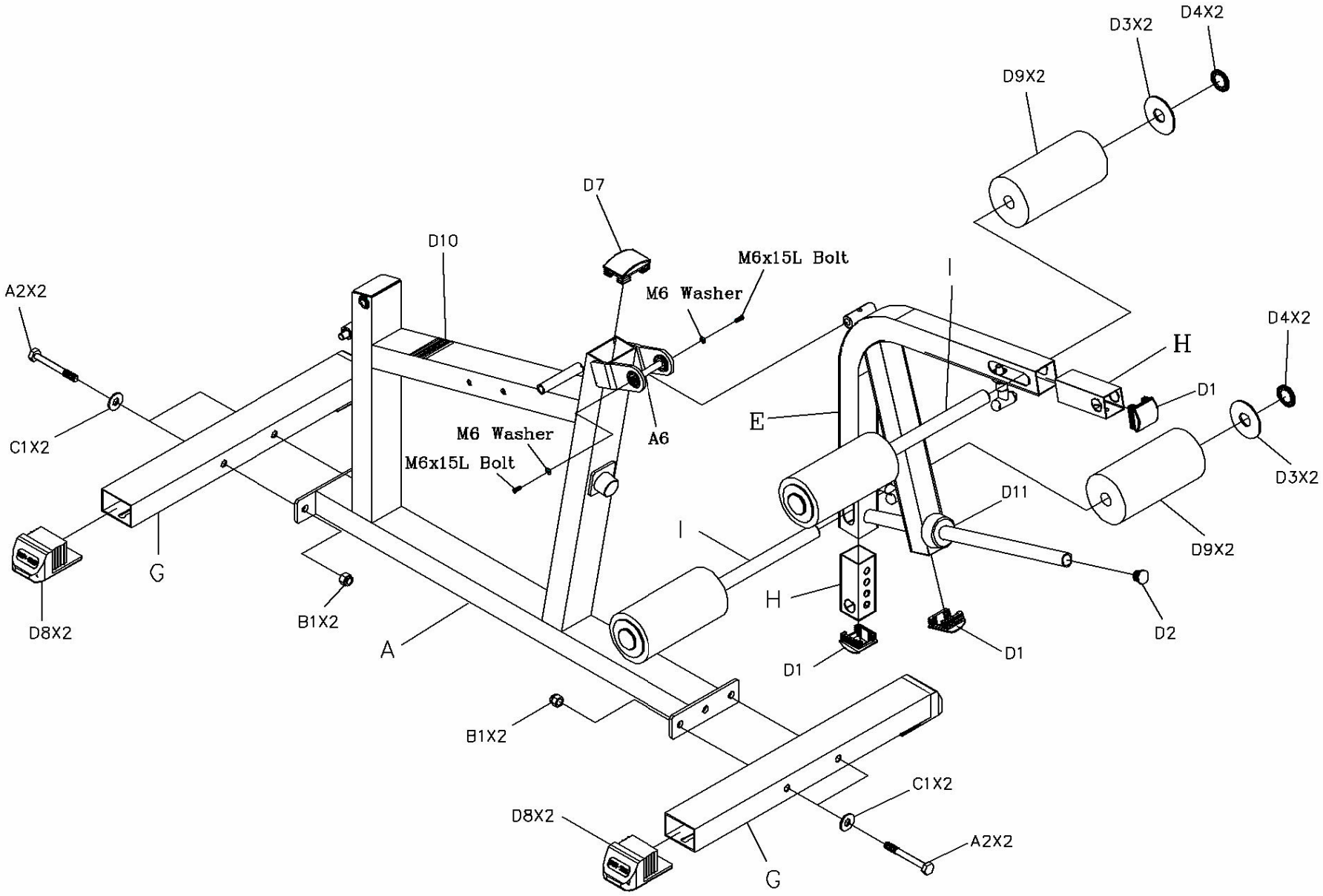
D4X2
D3X2
D9X2
D7
D10
M6x15L Bolt
M6 Washer
I
A2X2
H
D4X2
D1
E
A6
C1X2
M6 Washer
M6x15L Bolt
D3X2
D11
I
D9X2
G
H
D8X2
B1X2
D2
A
D1
D1
B1X2
C1X2
D8X2
A2X2
G

GLCE-365

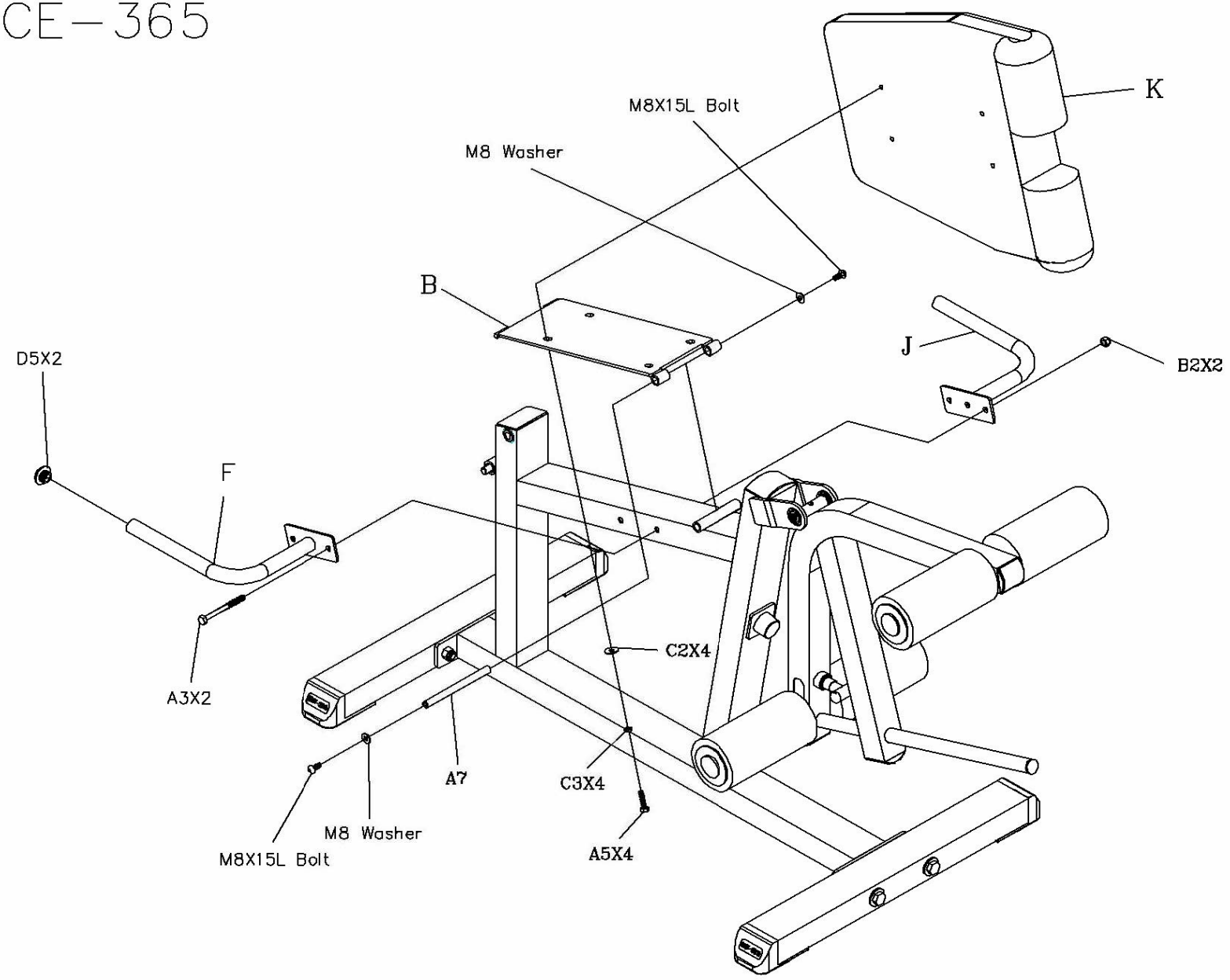
K
M8X15L Bolt
M8 Washer
B
J
B2X2
D5X2
F
C2X4
A3X2
A7
C3X4
M8 Washer
M8X15L Bolt
A5X4

GLCE-365

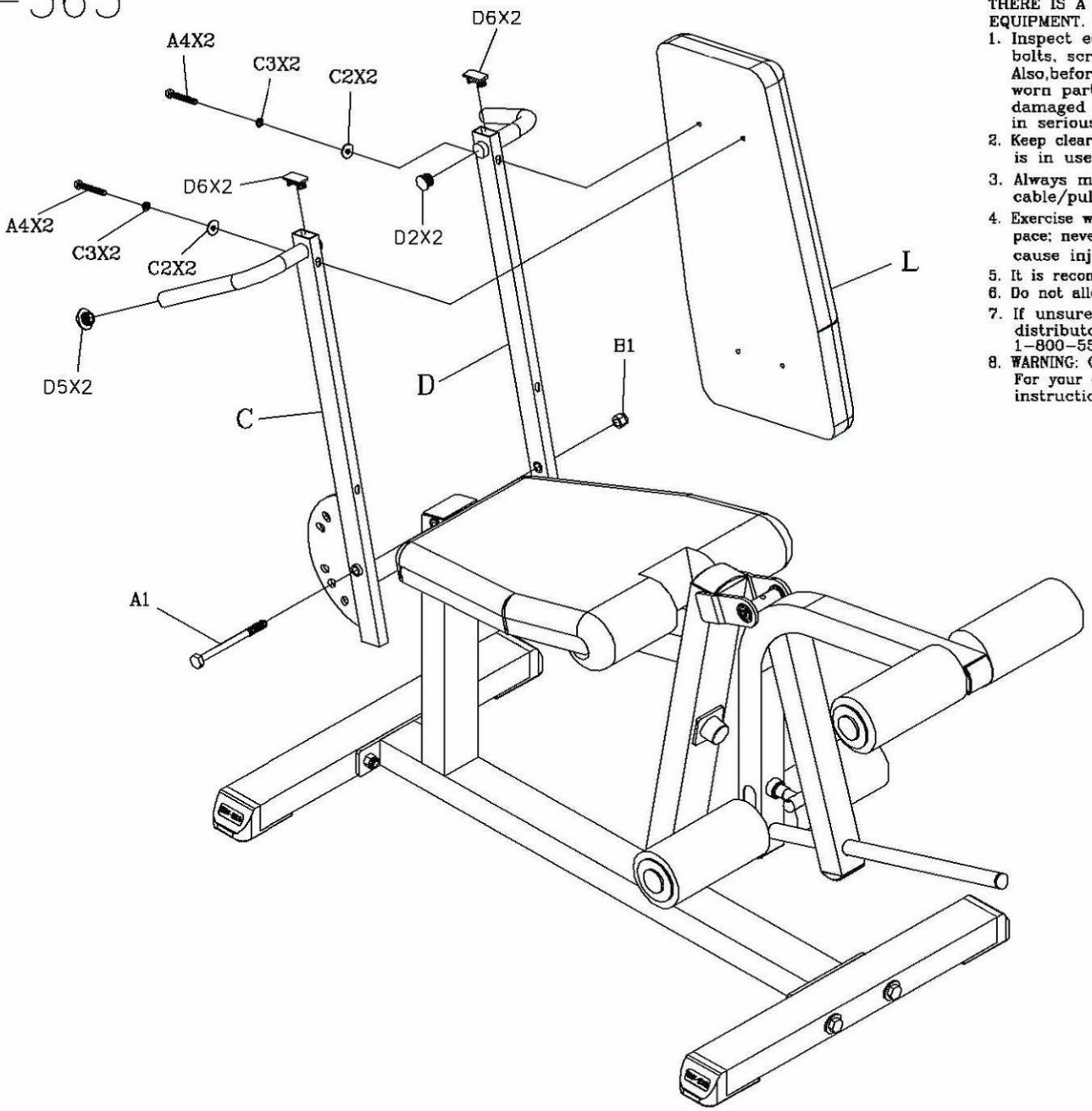

THERE IS A RISK ASSUMED BY INDIVIDUALS WHO USE THIS TYPE OF EQUIPMENT. TO MINIMIZE RISK, YOU MUST FOLLOW THESE RULES:

1. Inspect equipment before each workout. Checke that all nuts, bolts, screws and pop pins are in place and fully tightened. Also,before use,check cables for signs of wear. Replace all worn parts immediately. Never use machine if any parts are damaged or missing. Failure to follow these rules may result in serious injury.
2. Keep clear of the cables and all moving parts when the machine is in use.
3. Always make sure all Snap Links are closed when doing any cable/pulley exercises.
4. Exercise with care. Perform your exercises at a smooth moderate pace; never perform jerky or uncoordinated movements that may cause injury.
5. It is recommended that you should workout with a training partner.
6. Do not allow children or minors to play on or around this equipment.
7. If unsure of proper use of equipment, call your local Body-Solid distributor or the Body-Solid customer service department at 1-800-556-3113.
8. WARNING: Consult your physician before starting your exercise program. For your own safety, do not begin any exercise program without proper instruction.

RAL2-11-98