Инструкция

Скамья для жима вниз головой Body Solid PRO CLUB LINE SDB351G

Полезные ссылки:

Скамья для жима вниз головой Body Solid PRO CLUB LINE SDB351G - смотреть на сайте

Body-Solid

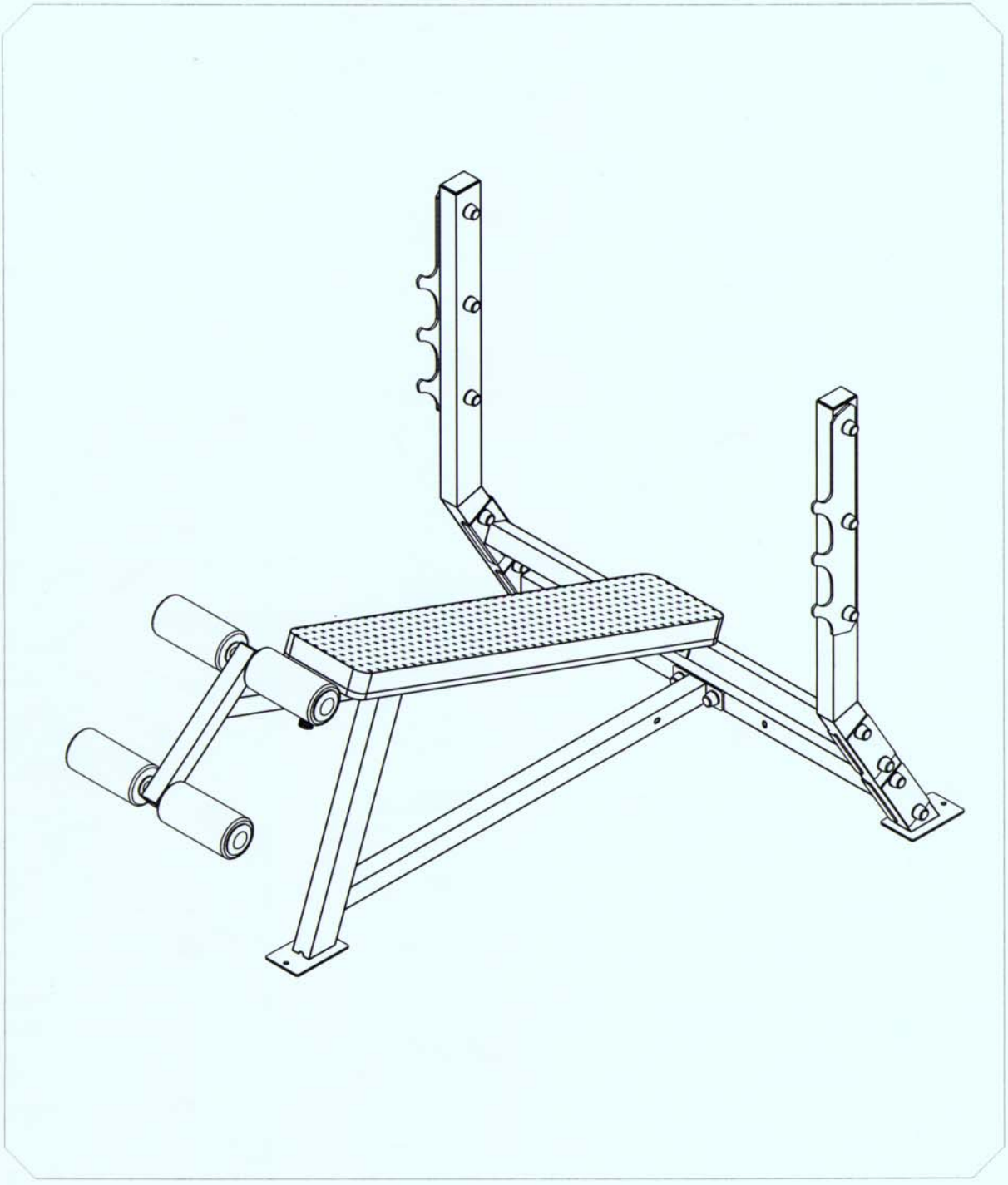

BODY-SOLID,Inc.
1900 S. Des Plaines Ave.
Forest Park, IL 60130 USA
Phone:(708)427-3555
Fax:(708)427-3556
www.bodysolid.com

SDB-351 OWNER'S MANUAL

HARDWARE ILLUSTRATION

	Qty.
A1. 1/2"X3 1/4" HEX HEAD BOLT	[16PCS]
A2. 1/2"X3 1/2" HEX HEAD BOLT	[4PCS]
A3. 5/16"X1 1/4" HEX HEAD BOLT	[4PCS]
B1. 1/2" NYLON LOCK NUT	[20PCS]
C1. 1/2" (I.D) WASHER	[40PCS]
C2. 1/2" ROUND WASHER	[40PCS]
C3. 5/16" (I.D) WASHER	[4PCS]
C4. 5/16" SPRING WASHER	[4PCS]
D1. 1/2" BOLT CAP	[40PCS]
D2. ø1" ROUND END CAP (8341-033)	[4PCS]
D3. 1 3/4"X1 3/4" END CAP (9211-004)	[2PCS]
D4. 50X75 END CAP(9211-012)	[2PCS]
D5. ø2" NYLON WASHER (9214-001)	[4PCS]
D6. ø3" NYLON WASHER (9214-008)	[4PCS]
D7. 4"X23X8" FOAM ROLLER (9161-009)	[4PCS]

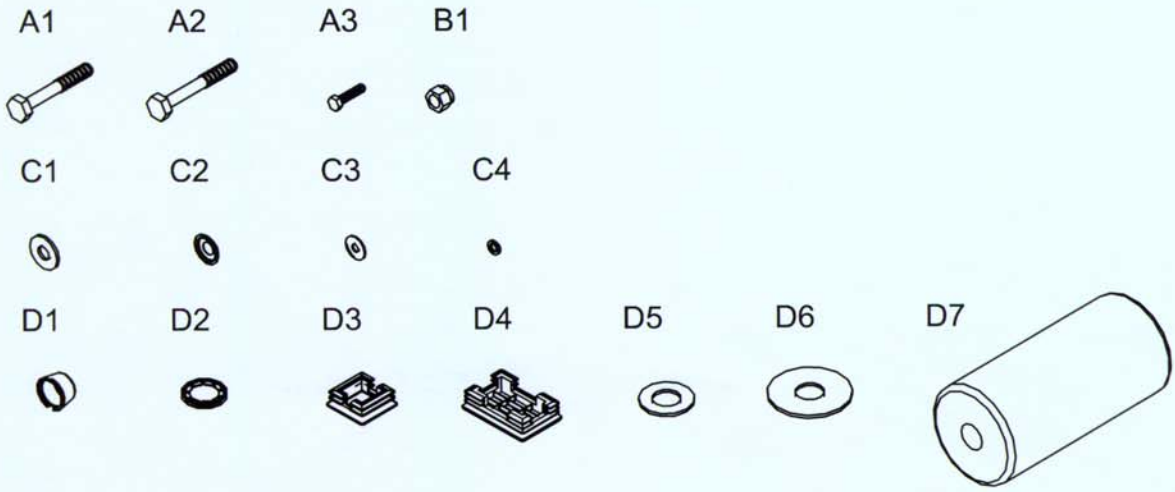

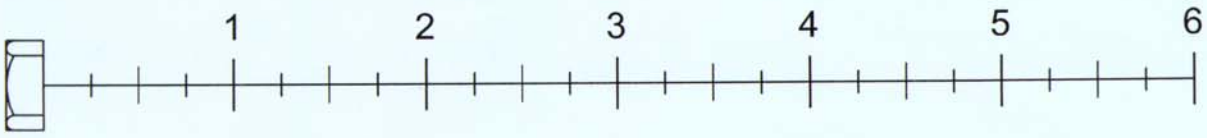

PARTS ILLUSTRATION

A. [2PCS]

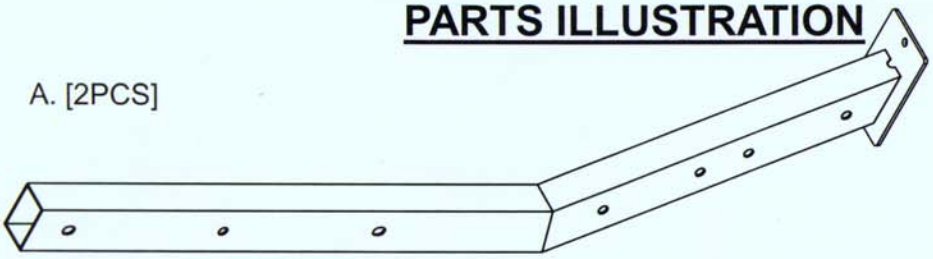

B. [1PCS]

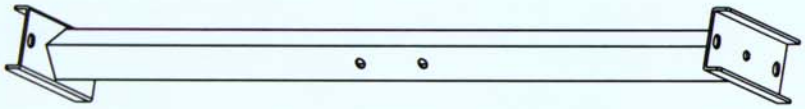

C. [1PCS]

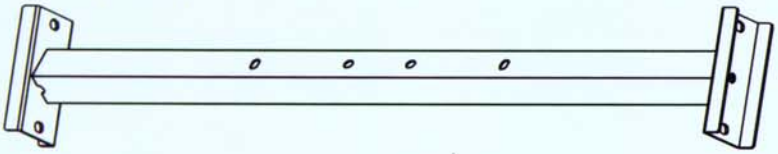

D. [1PCS]

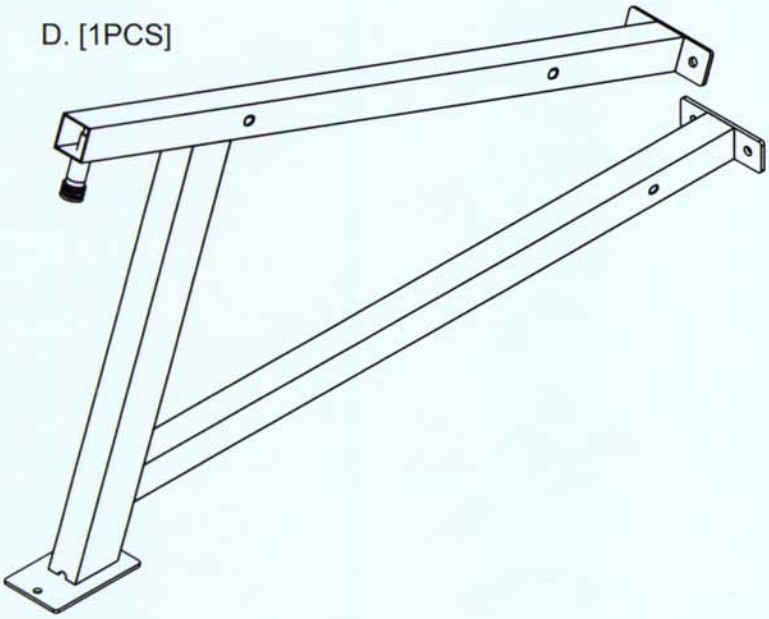

F. [1PCS]

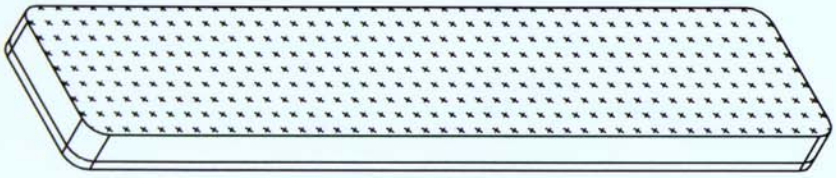

E. [1PCS]

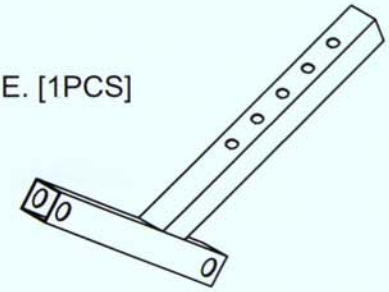

G. [2PCS]

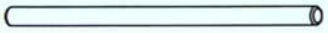

H. [4PCS]

I. [2PCS]

J. [4PCS]

K. [2PCS]

ASSEMBLY- STEP 1

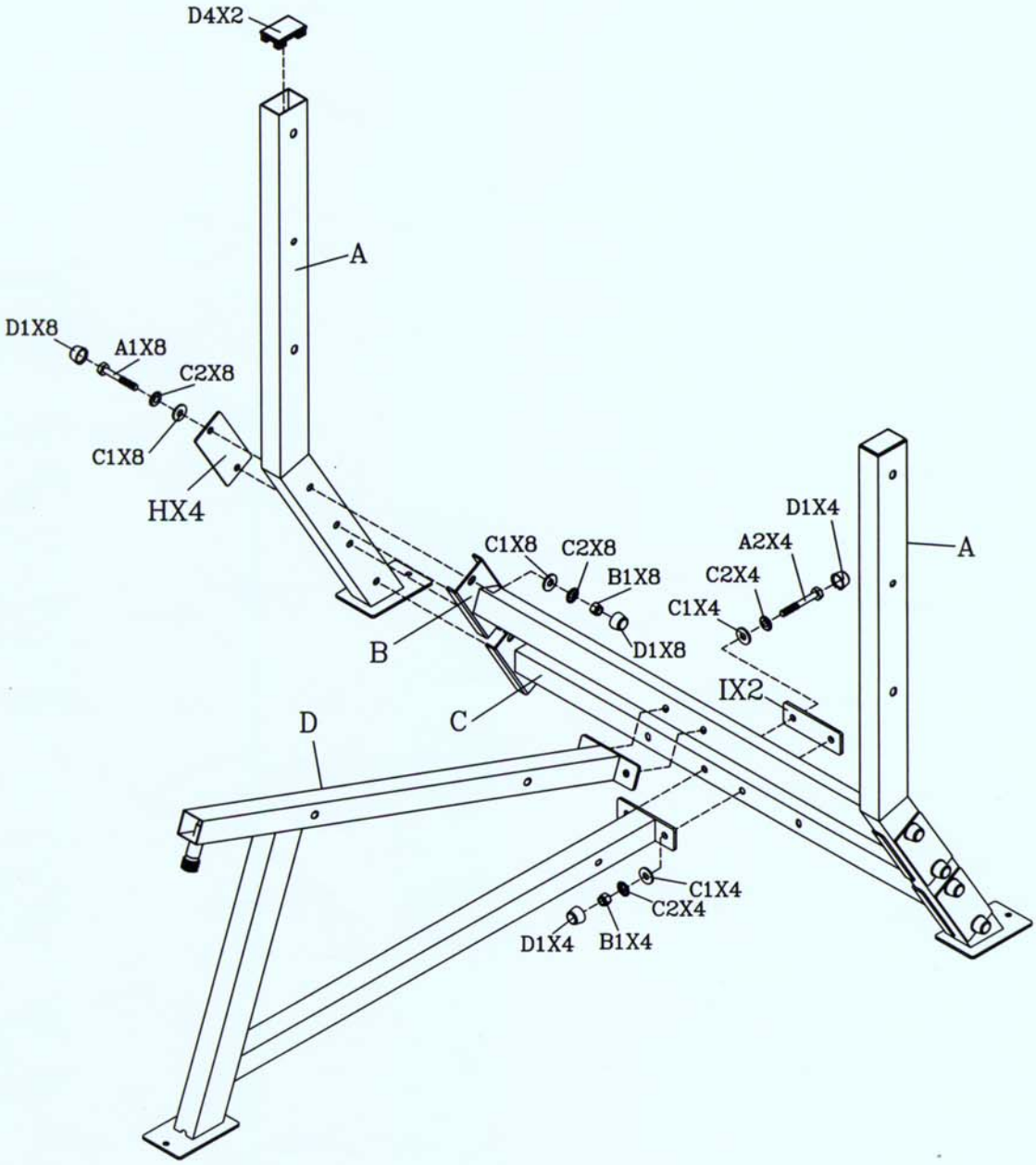

ASSEMBLY- STEP 2

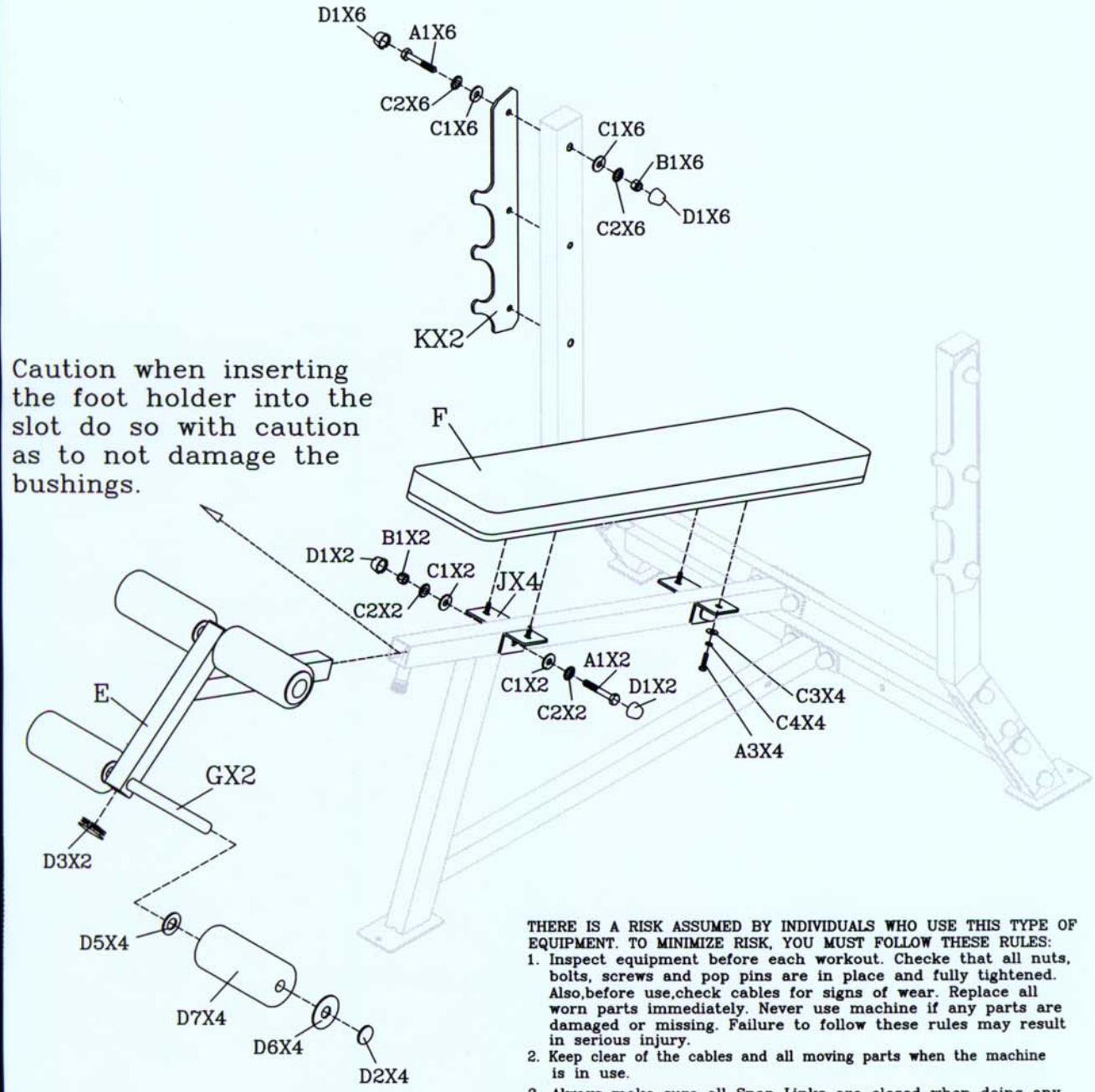

THERE IS A RISK ASSUMED BY INDIVIDUALS WHO USE THIS TYPE OF EQUIPMENT. TO MINIMIZE RISK, YOU MUST FOLLOW THESE RULES:

1. Inspect equipment before each workout. Checke that all nuts, bolts, screws and pop pins are in place and fully tightened. Also,before use,check cables for signs of wear. Replace all worn parts immediately. Never use machine if any parts are damaged or missing. Failure to follow these rules may result in serious injury.
2. Keep clear of the cables and all moving parts when the machine is in use.
3. Always make sure all Snap Links are closed when doing any cable/pulley exercises.
4. Exercise with care. Perform your exercises at a smooth moderate pace; never perform jerky or uncoordinated movements that may cause injury.
5. It is recommended that you should workout with a training partner.
6. Do not allow children or minors to play on or around this equipment.
7. If unsure of proper use of equipment, call your local Body-Solid distributor or the Body-Solid customer service department at 1-800-556-3113.
8. WARNING: Consult your physician before starting your exercise program. For your own safety. do not begin any exercise program without proper instruction.

RAL2-11-98