Инструкция

Тренажер 2-х сторонний силовой комплекс Impulse IF 2060

Полезные ссылки:

Тренажер 2-х сторонний силовой комплекс Impulse IF 2060 - смотреть на сайте

Тренажер 2-х сторонний силовой комплекс Impulse IF 2060 - читать отзывы

IF2060

2060 Home Gym

OWNER'S MANUAL

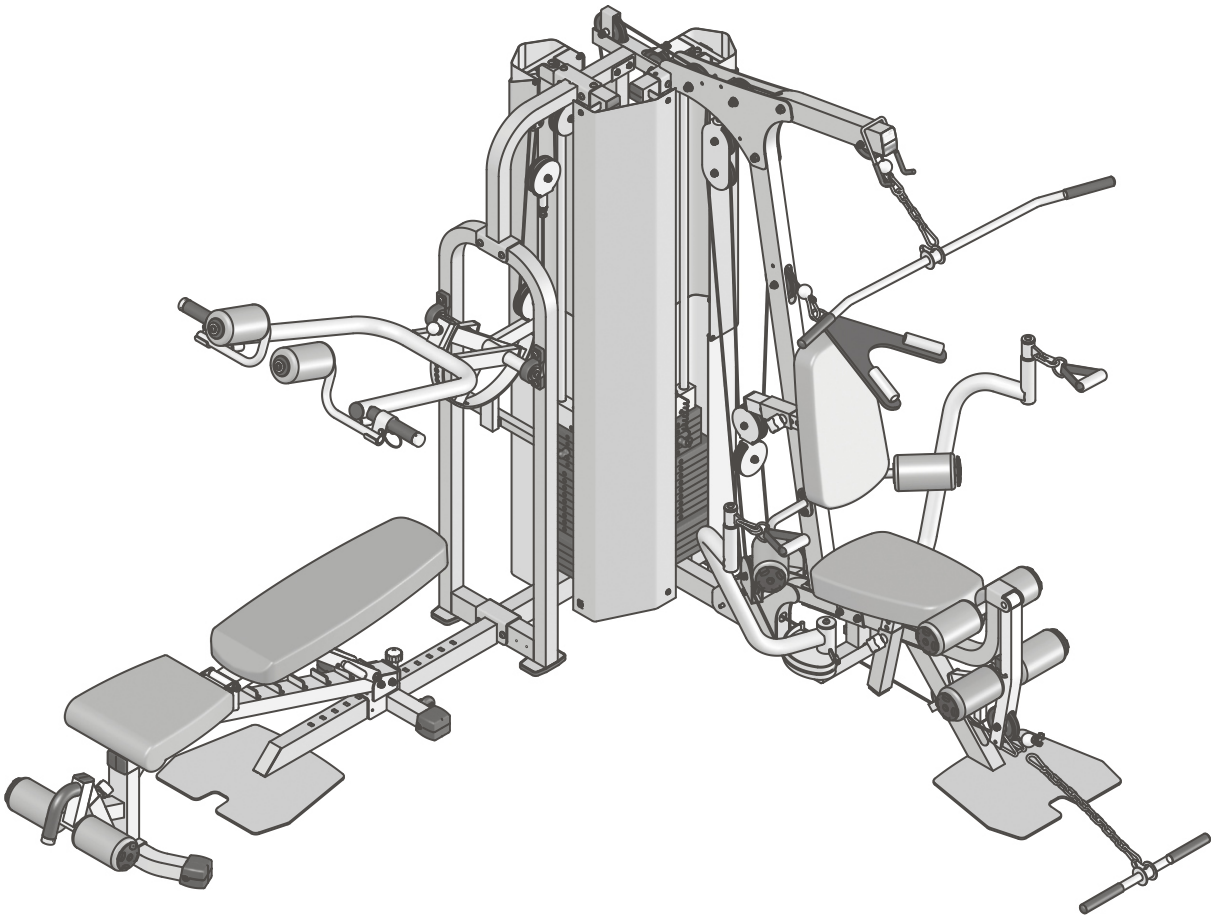

! CAUTION

Read all precautions
and instructions in this manual
before using this equipment

! CAUTION
Read all precautions and instructions in this manual before using this equipment.

Table Of Contents

Important Safety Instructions---------- 3

Instructions---------- 4

Parts List---------- 5

Exploded View ---------- 7

Measurement Guide---------- 8

Assembly Instructions---------- 9

Assembly---------- 10

Cable View---------- 35

Weight Ratios---------- 36

Maintenance Schedule---------- 37

General Maintenance Information---------- 38

Weight Training Tips---------- 39

Specifications---------- 39

Important Safety Instructions

Before beginning any fitness program, you should obtain a complete physical examination from your physician. When using exercise equipment, basic precautions should always be taken, including the following:

* Read all instructions before using the equipment. These instructions are written to ensure your safety and to protect the unit.
* Do not allow children on or near the equipment.
* Use the equipment only for its intended purpose as described in this guide. Do not use accessory attachments that are not recommended by the manufacturer: such attachments might cause injuries.
* Wear proper exercise clothing and shoes for your workout----no loose clothing.
* Be careful when getting on or off the equipment.
* Do not overexert yourself or work to exhaustion.
* If you feel any pain or abnormal symptoms, stop your workout immediately and consult your physician.
* Never operate the unit when it has been dropped or damaged.
* Never drop or insert anything into any opening in the equipment.
* Always check the unit and its cables before each use. Make sure that all fasteners and cables are secure and in good working condition.
* Frayed or worn cables can be dangerous and may cause injury. Periodically check these cables for any indication of wear.
* Keep hands, limbs, loose clothing and long hair well out of the way of moving parts.
* Do not attempt to lift more weight than you can control safely.
* Do not use the equipment outdoors.

Personal Safety During Assembly

* Read each step in the assembly instructions and follow the steps in sequence. Do not skip ahead. If you skip ahead, you may learn later that you have to disassemble components and that you may have damaged the equipment.
* Assemble and operate the equipment on a solid, level surface. Locate the unit a few feet from walls or furniture to provide easy access. The equipment is designed for your enjoyment. By following these precautions and using common sense, you will have many safe and pleasurable hours of healthful exercise with the equipment.

Instructions

Before beginning assembly please take the time to read instructions thoroughly. Please use the various lists in this manual to make sure that all parts have been included in your shipment. When ordering, use part number and description from the lists. Use only our replacement part when servicing. Failure to do so will void your warranty and could result in personal injury.

The equipment is designed to provide the smoothest, most effective exercise motion possible. After assembly, you should check all functions to ensure correct operation. If you experience problems, first recheck the assembly instructions to locate any possible errors made during assembly. If you are unable to correct the problem, call your authorized dealer. Be sure to have your serial number and this manual when calling. When all parts have been accounted for, continue on.

Tools Required

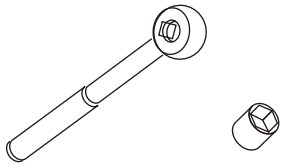

Ratchet Wrench and Socket

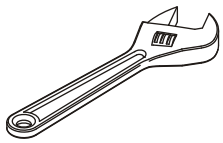

Adjustable Wrench

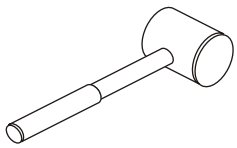

Rubber Mallet

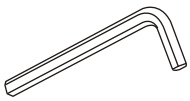

Hex Key Wrench Set

Parts List

NOTE: SOME OF THESE PARTS MAY COME PRE-INSTALLED

Item No.	Description	Qty	Item No.	Description	Qty
1	Rear Frame	1	42	Weight Shroud B	1
2	Up Frame	1	43	Long Lat Bar	1
3	Rear Upright	1	44	Short Lat Bar	1
4	Right Base Frame	1	45	Adjustable Stopper	1
5	Right Top Frame For Guide Rod	1	46	Cable Retainer Bracket	2
6	Seat Pad Support Receptacle	1	47	Guide Rod Φ25*2.5*1855	4
7	Main Upright	1	48	BENCH Seat Pad	1
8	Left Base Frame	1	49	Back Pad	1
9	Left Top Frame For Guide Rod	1	50	Seat Pad 546*318*75	1
10	Press Arm Support	1	51	Back Pad 546*290*75	1
11	Press Station Base Frame	1	52	15LB Weight Plate	10
12	Chest Press Cam	1	53	10LB Weight Plate	18
13	Bench Main Frame	1	54	5LB Weight Plate	10
14	Bench Front Frame	1	55	Top Plate	2
15	Bench Rear Frame	1	56	Weight Pin	2
16	Bench Seat Pad Support	1	57	4.5" Pulley	19
17	Bench Back Pad Support	1	58	Foam Padding	10
18	Foam Adjustable Bracket	1	59	Pop Pin(Locking)	3
19	Front Upright	1	60	Ab Strap	1
20	Leg Extension Lever	1	61	Lat Strap	2
21	Pec Dec mount	1	62	Ankle Strap	1
22	Left Pec Dec Arm	1	63	Lat Bar Grip	4
23	Right Pec Dec Arm	1	64	Bench Seat Pad ADJ. Bar	1
24	Pec Dec Handle Bar	2	65	Ball Head for Pin	1
25	Foam Frame w/o Shaft	1	66	Spring Φ1.5*Φ13*43	1
26	Foam Frame w/Shaft	1	67	Spring Φ1*Φ13*38	1
27	Seat Pad Support	1	68	Pin Shaft	1
28	Back Pad ADJ. Bracket	1	69	Pin Knob	1
29	Left Leg Hold Leg Frame	1	70	Nylon Spacer	1
30	Right Leg Hold Leg Frame	1	71	Grip Φ26*Φ19*80	1
31	Pulley Bracket Block	1	72	Handle Grip Φ36*Φ30*188	3
32	Pulley Bracket	1	73	Safety Pin	2
33	Pulley Bracket w/Shaft	2	74	Pop Pin	1
34	Long Foam Tube	1	75	Pillow block Bearing	2
35	Press Arm	1	76	Pec Dec Stop Bumper	2
36	Right Squat Arm	1	77	Bearing Φ25	4
37	Left Squat Arm	1	78	Caster Black	2
38	Press Station Shaft	1	79	Foot Cap 1 □50.8	4
39	Bench Back Pad ADJ. Frame	1	80	Base Pad	8
40	Foam Shaft	1	81	□25 End Cap Bumper	1
41	Bottom Weight Shroud	2	82	U Shape Pin	1

Parts List

NOTE: SOME OF THESE PARTS MAY COME PRE-INSTALLED

Item No.	Description	Qty	Item No.	Description	Qty
83	Sping Φ1*Φ8*35	1	123	Long Pulley SpacerΦ20*Φ10.5*14	8
84	Nylon Lock Nut M6	17	124	Cable Adaptor	1
85	Slip Tension Pin	1	125	Flat Washer Φ13*Φ24*1.5	25
86	Shaft For Leg Extension Φ16*M8*61	1	126	Nylon Lock Nut M12	13
87	Gear Hook	7	127	Button Head Cap Screw M10*50	4
88	Short Chain Φ5*5	1	128	Button Head Cap Screw M10*25	12
89	Roller Pad Tube Cap Φ25	6	129	Flat Washer Φ11*Φ38*2	8
90	Plastic Washer Φ66*8	8	130	Button Head Cap Screw M12*85	4
91	Plug Φ50	2	131	Button Head Cap Screw M12*80	4
92	Plug □40*80	1	132	Button Head Cap Screw M12*125	4
93	Plug □50.8*76.2	4	133	Button Head Cap Screw M10*105	2
94	Plug □50.8	6	134	Button Head Cap Screw M10*85	6
95	Plug □44.5	4	135	Button Head Cap Screw M10*80	7
96	Plug □50*25	8	136	Button Head Cap Screw M10*75	12
97	Socket Set Screw M8*6	3	137	Button Head Cap Screw M10*70	11
98	Button Head Cap Screw M8*15	9	138	Button Head Cap Screw M10*65	7
99	Weight Stack Bumper	4	139	Button Head Cap Screw M10*60	1
100	Rubber Mat	1	140	Socket Set Screw 10-32*3.2	6
101	Chrome Washer Φ38*Φ11*2	2	141	Button Head Cap Screw M10*45	14
102	Big Washer Φ56.5*Φ10.5*5	2	142	Button Head Cap Screw M10*30	4
103	Flat Philips Screw M4*20	2	143	Flat Washer Φ11*Φ20*2	128
104	Bronze Bushing Φ25.4	8	144	Nylon Lock Nut M10	56
105	Bronze Bushing Φ12.2	6	145	Top Weight Shroud	2
106	Plastic Button	8	146	Hex Key S6	1
107	Aluminium Cap Φ32	3	147	Hex Key S4	1
108	Plug Φ25	2	148	Lube	1
109	Rubber Stopper	2	150	Selector Rod	2
110	Lat Cable	1	151	Screw Bolt M12*35	2
111	Low Row/Abdominal Cable	1	152	Hex Nut M10	1
112	Pec Dec Cable	1	153	□50.8 Foot Cap 2	4
113	Leg Press Cable	1	154	Button Head Cap Screw M8*25	8
114	Long Chest Cable	1	155	Flat Washer Φ9*Φ16*1.6	10
115	Short Chest Cable	1	157	Middle Weight Shroud	2
116	Long Chain Φ5*12	1	158	Small Spacer Φ17.5*Φ7*5	16
117	Flat Washer Φ9*Φ22*2	7	159	Button Head Cap Screw M6*18	16
118	Spring Washer Φ8	1	160	Flat Washer Φ6.6*Φ12*1.6	32
119	Spring Washer Φ10	17	161	Wrench 17-19	1
120	Bronze Bushing Φ16	2	162	Plug □40*80	1
121	Longer Pulley SpacerΦ20*Φ10.5*19.5	6	163	Hex Key 3/32"	1
122	Short Pulley SpacerΦ20*Φ10.5*11.5	2	164	Paint	1

Exploded View

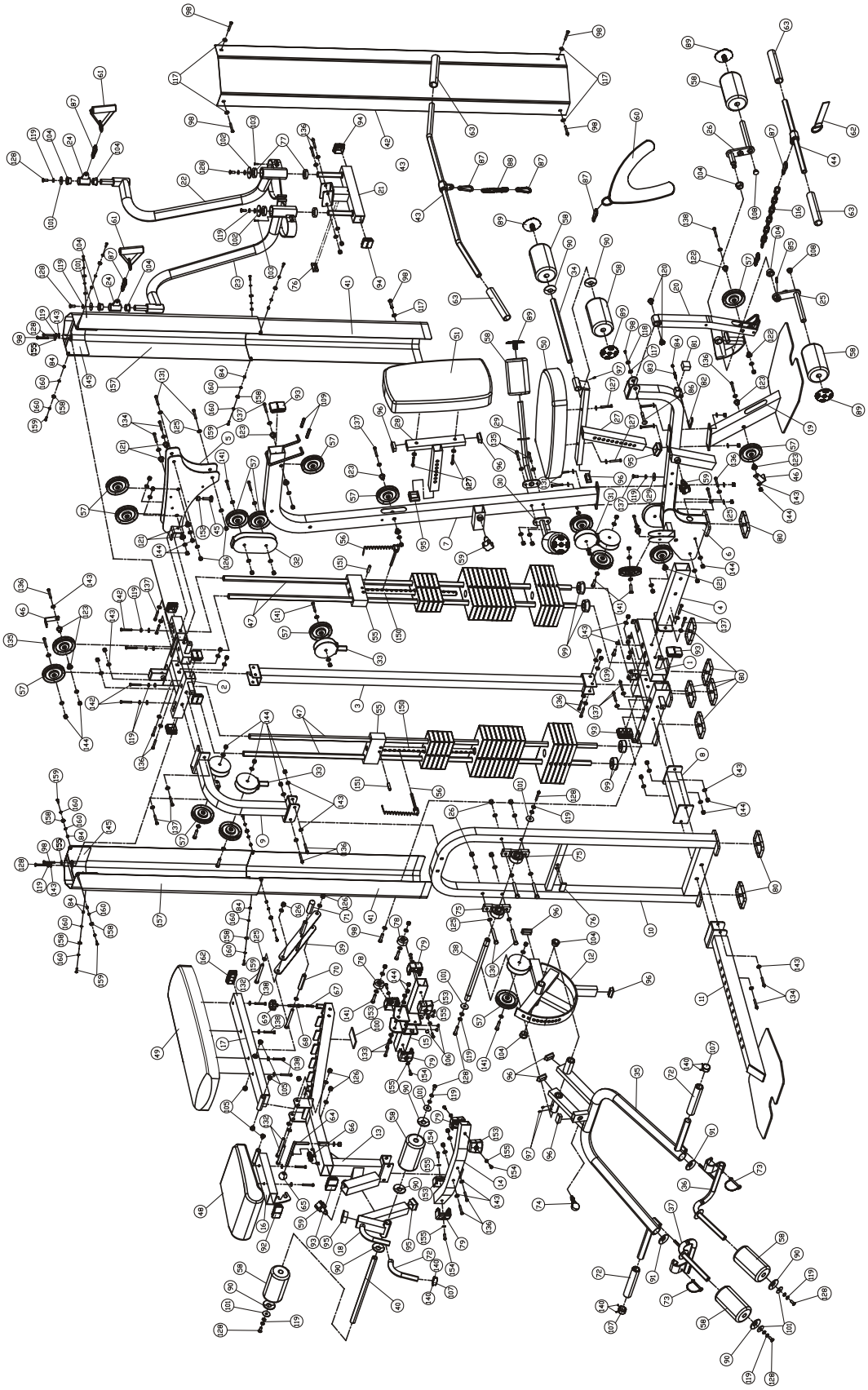

Measurement Guide

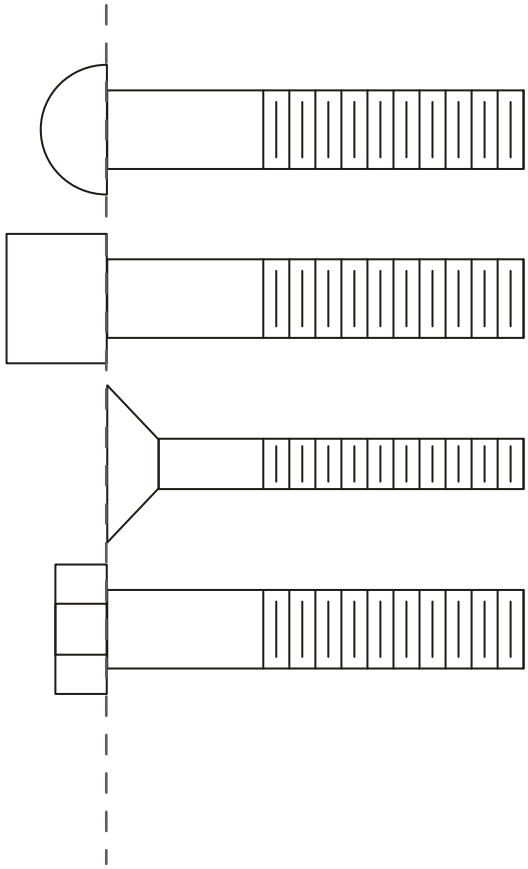

BHCS = Button Head Cap Screw

SHCS = Socket Head Cap Screw

FHCS = Flat Head Cap Screw

HHB = Hex Head Bolt

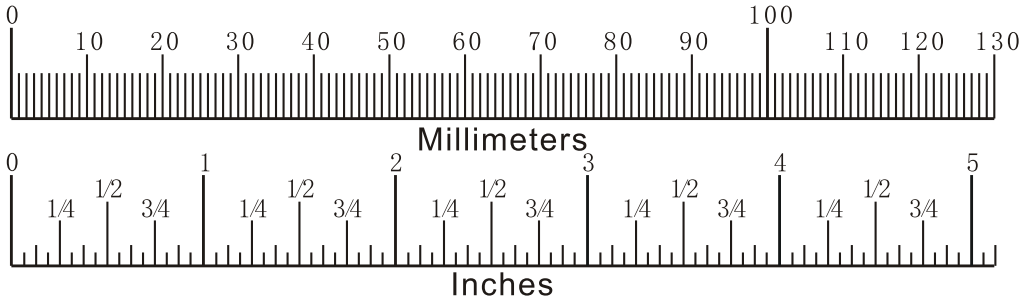

Assembly Instructions

Assembly of the equipment takes professional installers about 2 hours. If this is the first time you have assembled this type of equipment, plan to spend more time. It is strongly recommended to assemble the equipment by professional installers. You may find it quicker, safer, easier to assemble this equipment with the help of a friend, as some of components may be large, heavy or awkward to handle alone. It is important that you assemble your product in a clean, clear, uncluttered area. This will enable you to move around the product while you are fitting components and reduce the possibility of injury during assembly.

Note

As with any assembled part, proper alignment and adjustment is critical. While tightening the fasteners, be sure to leave room for adjustments. Do not fully tighten the fasteners until instructed to do so. Be careful to assemble the components in the sequence presented in this guide.

Assembly

Step 1

1. Attach the Right Base Frame (#4) to the Rear Frame (#1), using:
   two M10*70 BHCS (#137) four Φ11*Φ20*2 Flat Washers (#143)
   two M10 Nylon Lock Nuts (#144)
2. Attach the Left Base Frame (#8) to the Rear Frame (#1), using:
   two M10*70 BHCS (#137) four Φ11*Φ20*2 Flat Washers (#143)
   two M10 Nylon Lock Nuts (#144)
3. Attach four Guide Rod (#47) and four Weight Stack Bumper (#99) to the Rear Frame (#1).
4. Attach the Rear Upright (#3) to the Rear Frame (#1), using:
   two M10*75 BHCS (#136) four Φ11*Φ20*2 Flat Washers (#143)
   two M10 Nylon Lock Nuts (#144)

Note: Hand tighten bolts and Nylon Lock nuts until machine is fully assembled.

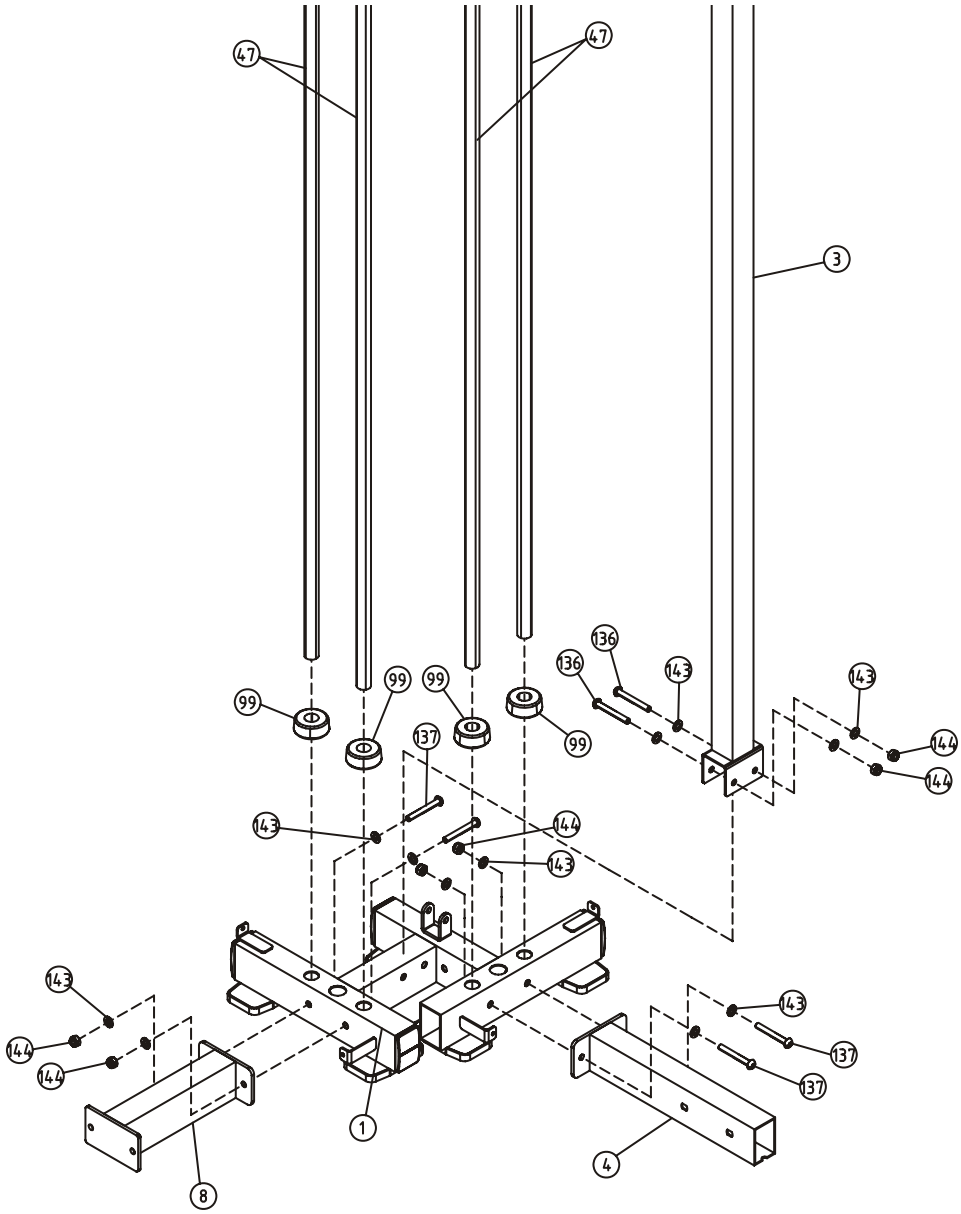

Step 2

1. Attach:
   five 15LBS Weight Plates (#52)
   nine 10LBS Weight Plates (#53)
   five 5LBS Weight Plates (#54)
   one Top Plate (#55)
   to two Guide Rods (#47).
2. Attach one Weight Pin (#56) to one Top Plate (#55).
3. Repeat this step to complete another one.
4. Attach the Up Frame (#2) to four Guide Rods (#47) and the Rear Upright (#3), using:
   two M10*75 BHCS (#136)
   four Φ11*Φ20*2 Flat Washers (#143)
   two M10 Nylon Lock Nuts (#144)

Note: Hand tighten bolts and Nylon Lock nuts until machine is fully assembled.

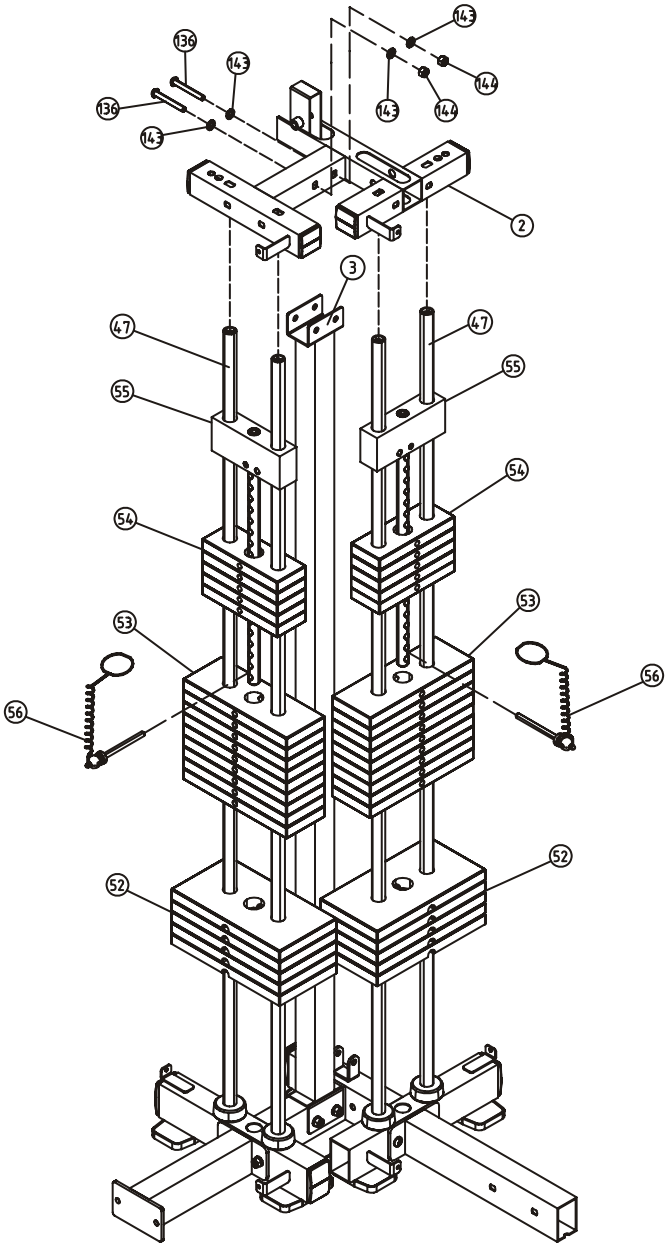

Step 3

1. Attach the Front Upright (#19) to the Seat Pad Support Receptacle (#6), using:
   two M10*75 BHCS (#136) four Φ11*Φ20*2 Flat Washers (#143)
   two M10 Nylon Lock Nuts (#144)
2. Attach the Seat Pad Support Receptacle (#6) to the Right Base Frame (#4), using:
   two M10*75 BHCS (#136) four Φ11*Φ20*2 Flat Washers (#143)
   two M10 Nylon Lock Nuts (#144)

Note: Hand tighten bolts and Nylon Lock nuts until machine is fully assembled.

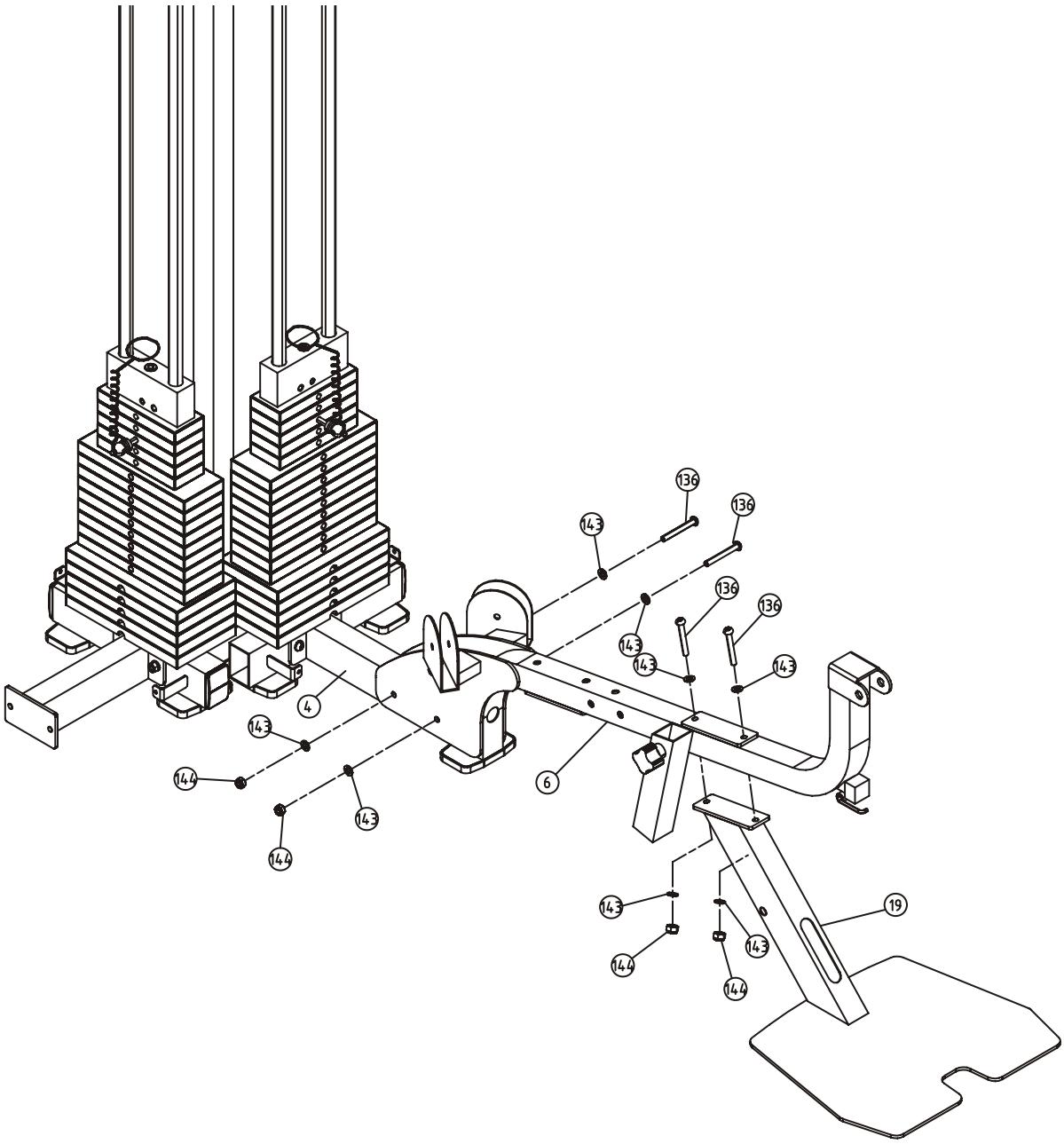

Step 4

1. Attach the Main Upright (#7) to the Seat Pad Support Receptacle (#6), using:
   two M12*80 BHCS (#131)
   four Φ13*Φ24*1.5 Flat Washers (#125)
   two M12 Nylon Lock Nuts (#126)
2. Attach the Right Top Frame For Guide Rod (#5) to the Up Frame (#2) and the Main Upright (#7), using:
   two M10*30 BHCS (#142)
   two M10*70 BHCS (#137)
   two M12*80 BHCS (#131)
   four Φ13*Φ24*1.5 Flat Washers (#125)
   six Φ11*Φ20*2 Flat Washers (#143)
   two M12 Nylon Lock Nuts (#126)
   two M10 Nylon Lock Nuts (#144)
   two Φ10 Spring Washers (#119)

Note: Hand tighten bolts and Nylon Lock nuts until machine is fully assembled.

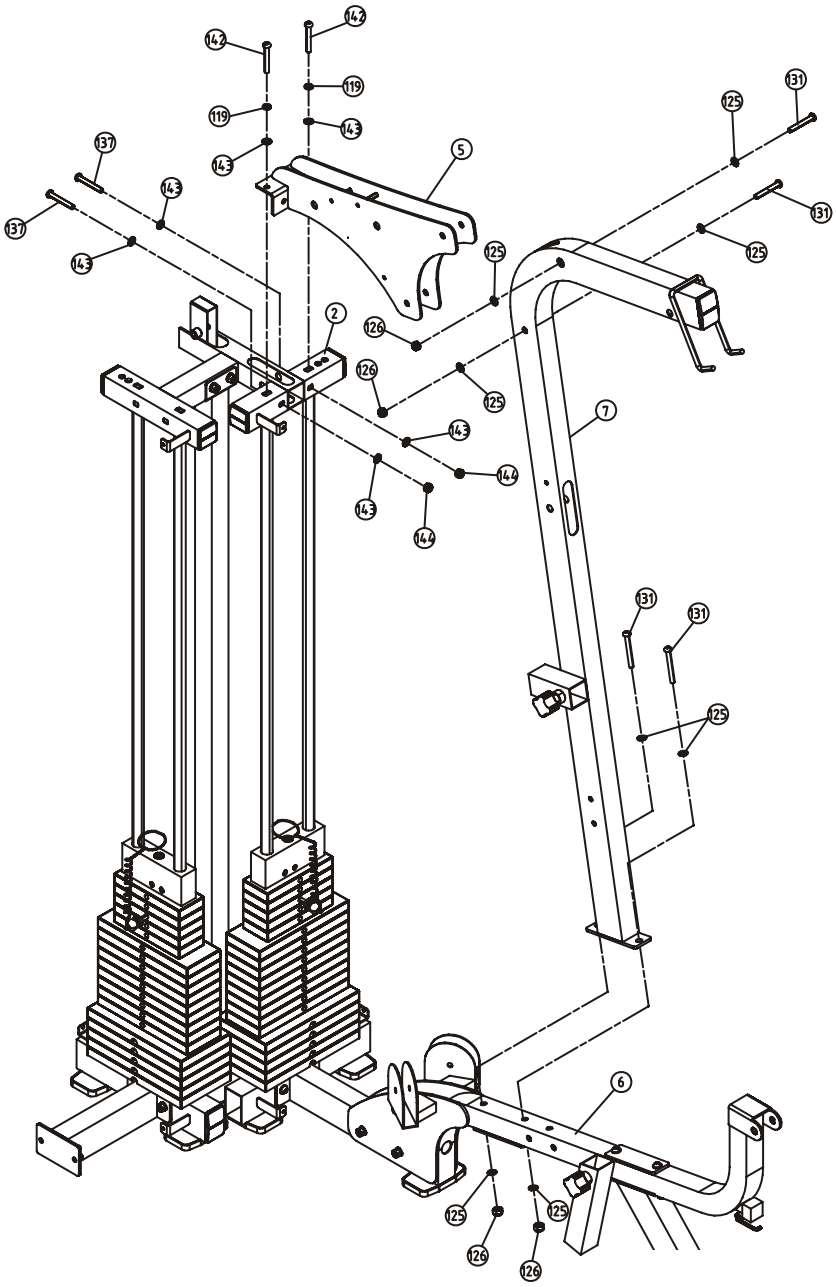

Step 5

1. Attach the Press Station Base Frame (#11) to the Press Arm Support (#10), and then to the Left Base Frame (#8), using:
   two M10*85 BHCS (#134)
   four Φ11*Φ20*2 Flat Washers (#143)
   two M10 Nylon Lock Nuts (#144)
2. Attach the Left Top Frame For Guide Rod (#9) to the Up Frame (#2) and the Press Arm Support (#10), using:
   two M10*30 BHCS (#142)
   two M10*70 BHCS (#137)
   two M10*75 BHCS (#136)
   ten Φ11*Φ20*2 Flat Washers (#143)
   four M10 Nylon Lock Nuts (#144)
   two Φ10 Spring Washers (#119)

Note: Hand tighten bolts and Nylon Lock nuts until machine is fully assembled.

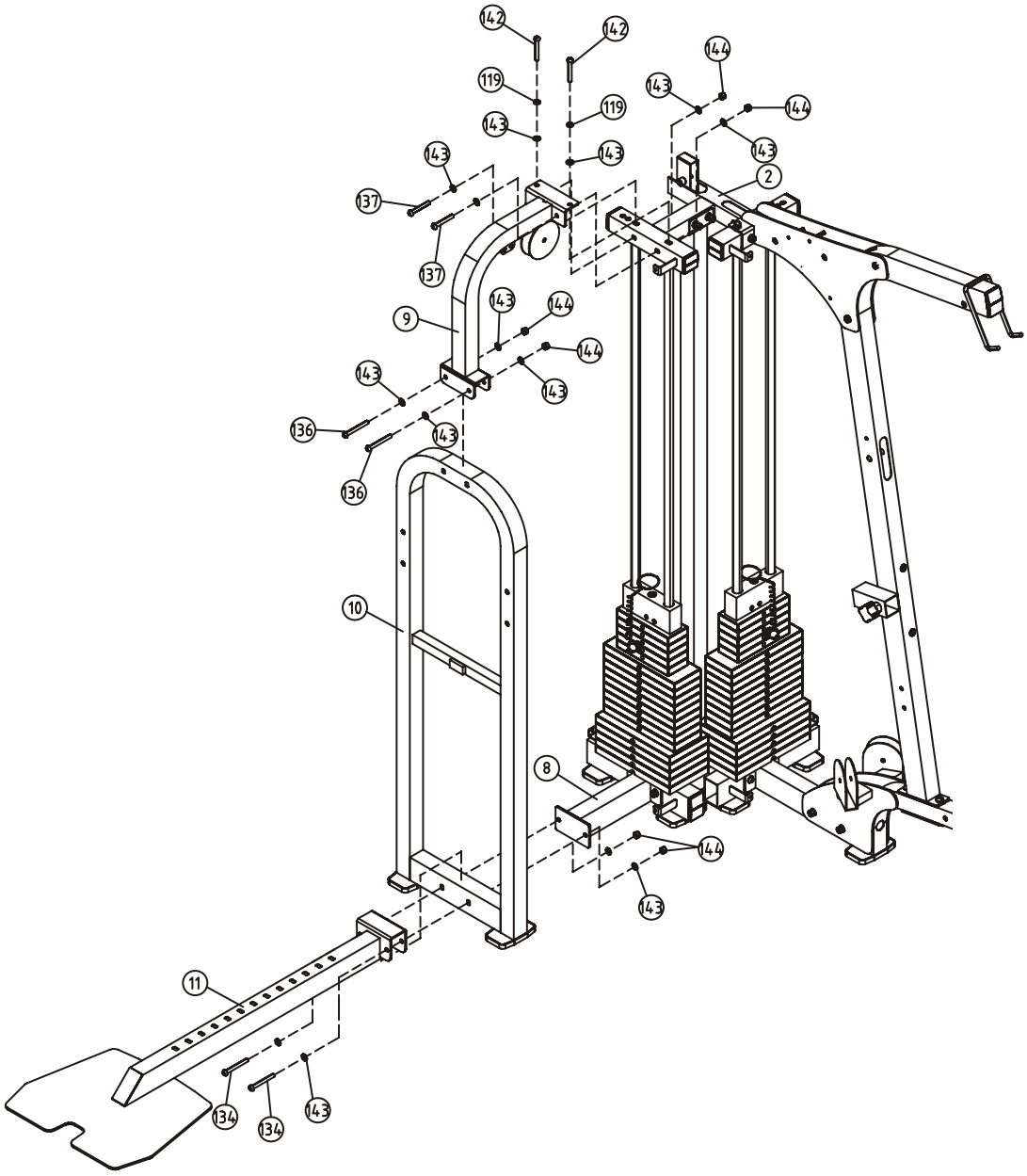

Step 6

Attach the Pec Dec mount (#21) to the Seat Pad Support Receptacle (#6), using:

two M10*75 BHCS (#136)
one M10*70 BHCS (#137)
one Φ10 Spring Washer (#119)
one Φ38*Φ11*2 Flat Washer (#129)
four Φ11*Φ20*2 Flat Washers (#143)
two M10 Nylon Lock Nuts (#144)

Note: Hand tighten bolts and Nylon Lock nuts until machine is fully assembled.

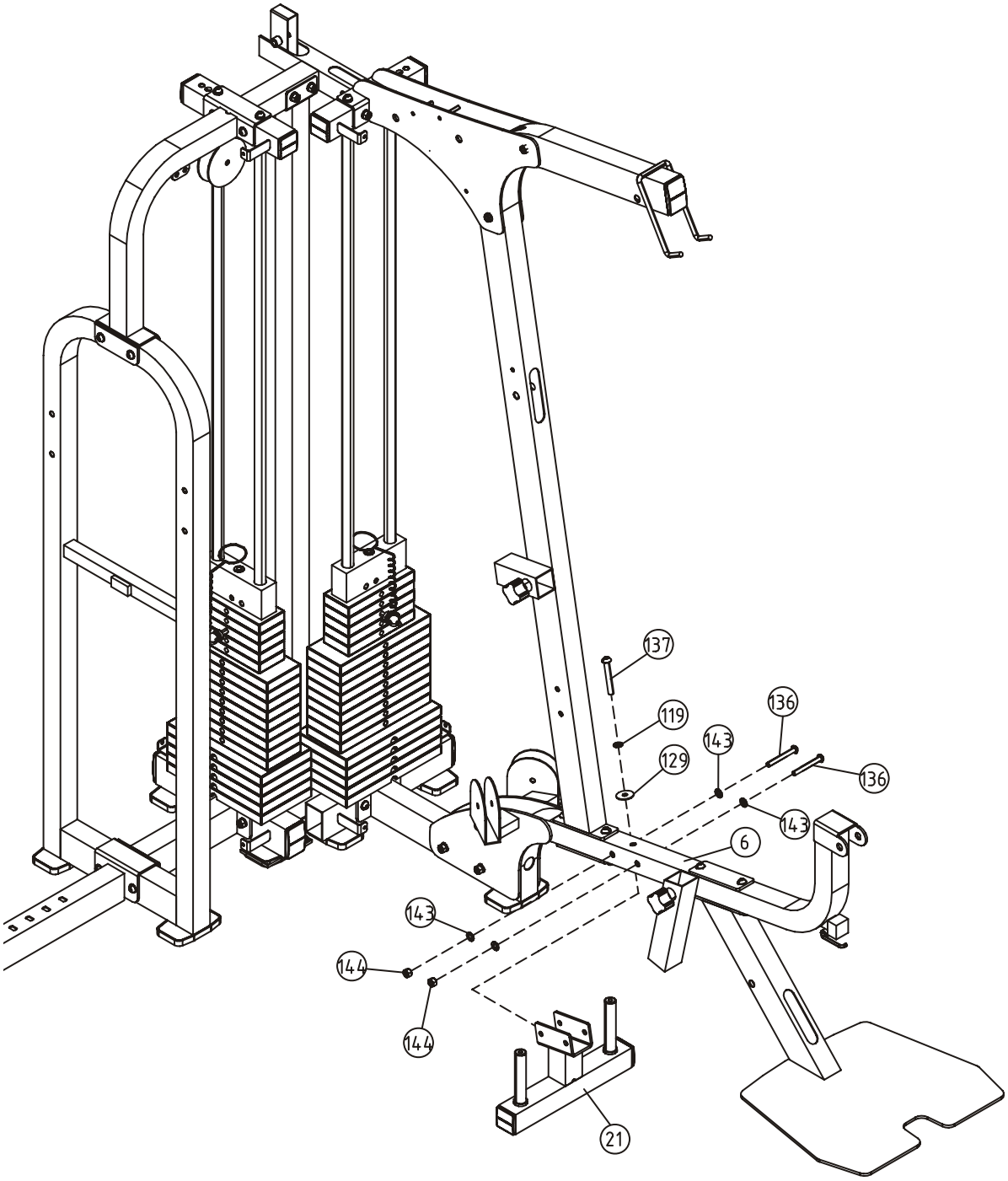

Step 7

Attach the Left Leg Hold Leg Frame (#29) and the Right Leg Hold Leg Frame (#30) to the Main Upright (#7), using:

two M10*80 BHCS (#135)

four Φ11*Φ20*2 Flat Washers (#143)

two M10 Nylon Lock Nuts (#144)

Note: Hand tighten bolts and Nylon Lock nuts until machine is fully assembled.

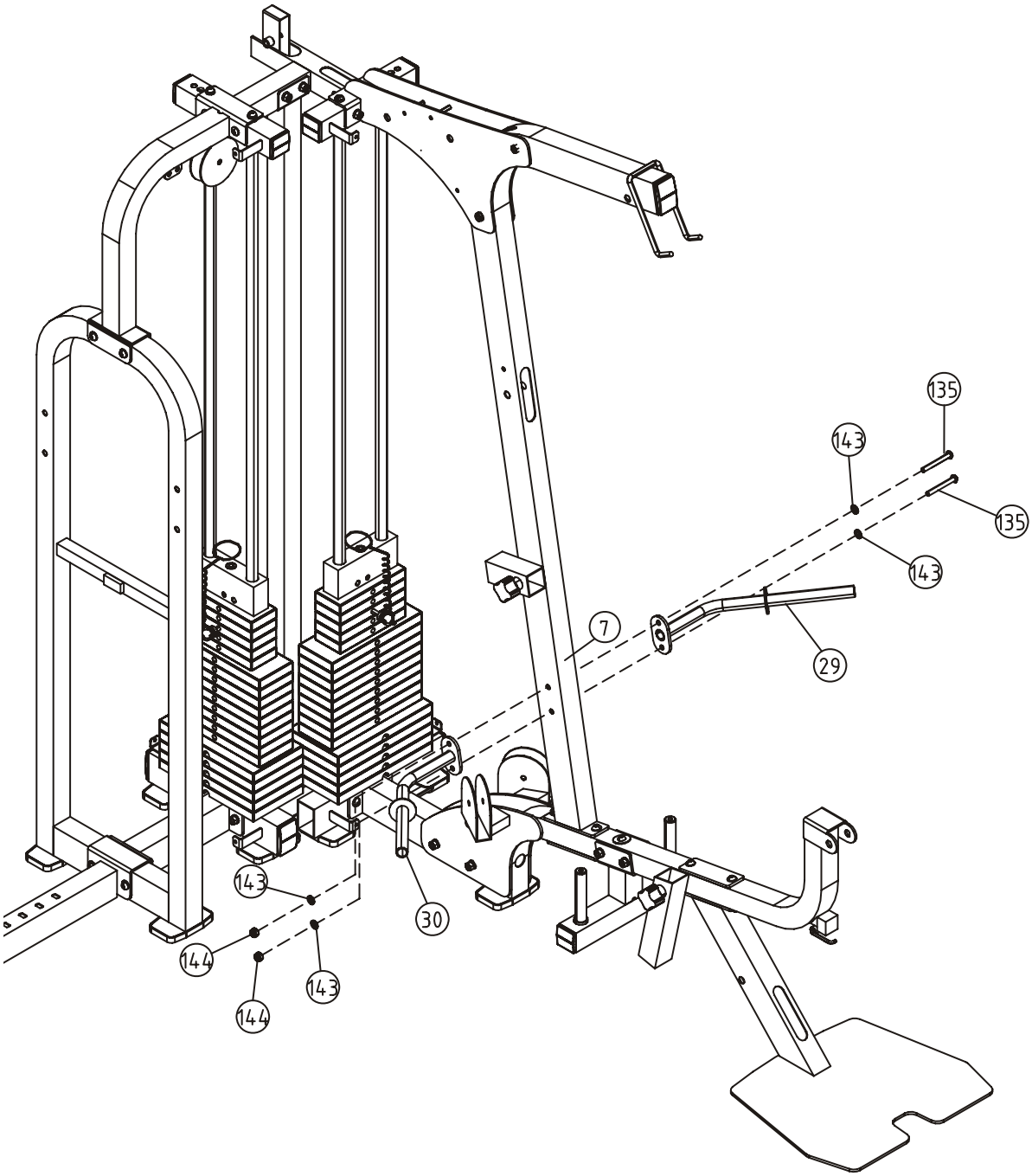

Step 8

1. Attach the Left Pec Dec Arm (#22) to the Pec Dec mount (#21), using:
   one M10*25 BHCS (#128) one Φ10 Spring Washer (#119)
   one Φ11*Φ20*2 Flat Washer (#143) one Φ56.5*Φ10.5*5 Big Washer (#102)
2. Attach the Pec Dec Handle Bar (#24) to the Left Pec Dec Arm (#22), using:
   one M10*25 BHCS (#128) one Φ10 Spring Washer (#119)
   one Φ11*Φ20*2 Flat Washer (#143) one Φ38*Φ11*2 Chrome Washer (#101)
3. Repeat this step to Attach the Right Pec Dec Arm (#23) to the Pec Dec mount (#21), and Attach the Pec Dec Handle Bar (#24) to the Right Pec Dec Arm (#23).

Note: Hand tighten bolts and Nylon Lock nuts until machine is fully assembled.

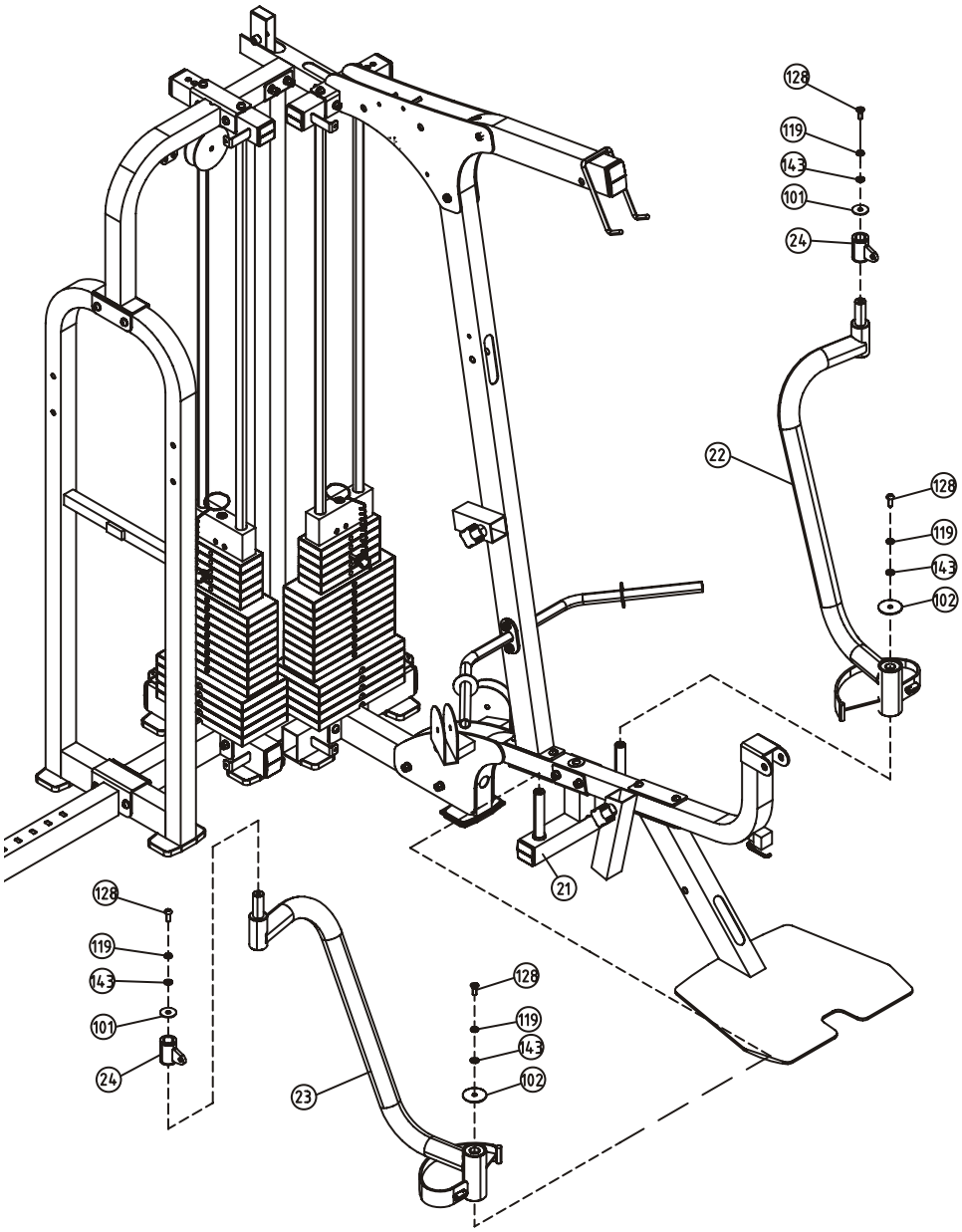

Step 9

1. Attach the Leg Extension Lever (#20) to the Seat Pad Support Receptacle (#6), using:

   one Φ16*M8*61 Shaft For Leg Extension (#86) one Φ9*Φ22*2 Flat Washer (#117)
   one Φ8 Spring Washer (#118) one M8*15 BHCS (#98)

2. Attach the Foam Frame w/Shaft (#26) to the Foam Frame w/o Shaft (#25) by the Leg Extension Lever (#20), using:

   one Φ8*32 Slip Tension Pin (#85)

Note: Hand tighten bolts and Nylon Lock nuts until machine is fully assembled.

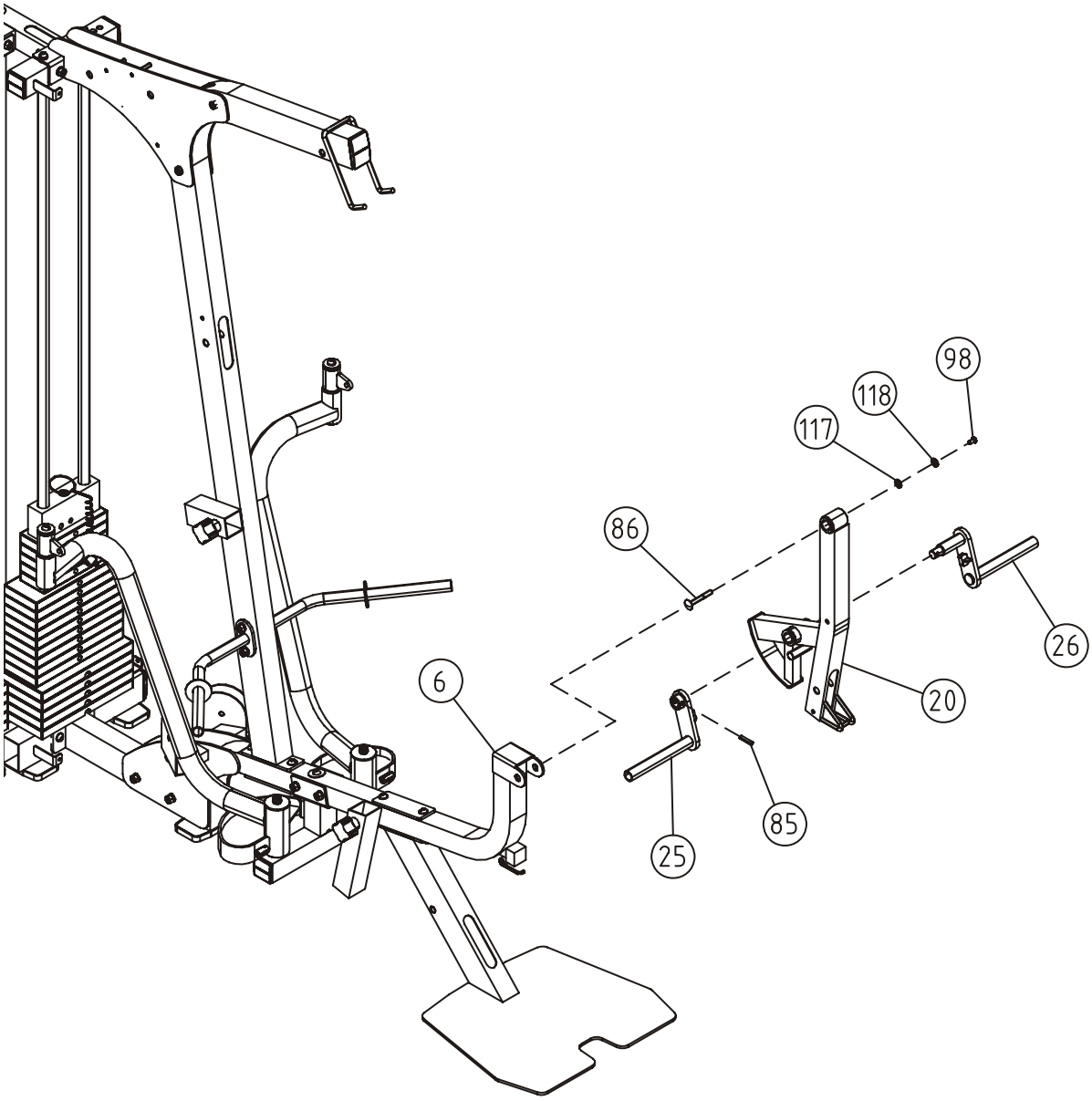

Step 10

1. Attach the Press Arm (#35) to the Chest Press Cam (#12), using:
   one Φ25.2*Φ25*437 Press Station Shaft (#38) two Pillow Block Bearings (#75)
   two Φ38*Φ11*2 Chrome Washers (#101) two Φ11*Φ20*2 Flat Washers (#143)
   two Φ10 Spring Washers (#119) two M10*25 BHCS (#128)
   two M8*6 Socket Set Screws (#97)
2. Attach the Press Arm (#35) and the Chest Press Cam (#12) to the Press Arm Support (#10), using:
   four M12*85 BHCS (#130) eight Φ13*Φ24*1.5 Flat Washers (#125)
   four M12 Nylon Lock Nuts (#126)

Note: Hand tighten bolts and Nylon Lock nuts until machine is fully assembled.

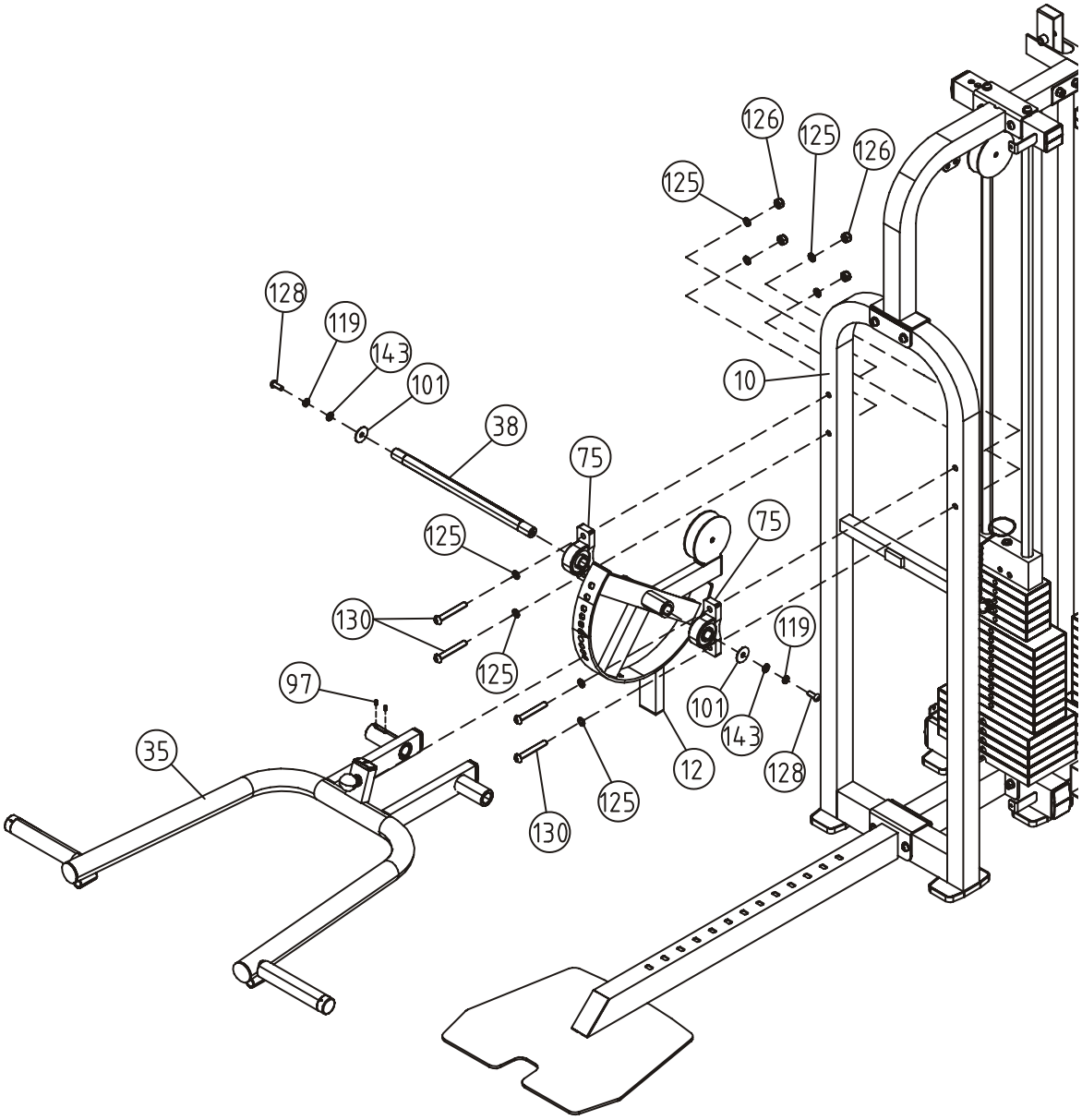

Step 11

1. Attach the Bench Rear Frame (#15) to the Bench Main Frame (#13), using:
   two M10*105 BHCS (#133) four Φ11*Φ20*2 Flat Washers (#143)
   two M10 Nylon Lock Nuts (#144)
2. Attach the Bench Front Frame (#14) to the Bench Main Frame (#13), using:
   two M10*75 BHCS (#136) four Φ11*Φ20*2 Flat Washers (#143)
   two M10 Nylon Lock Nuts (#144)

Note: Hand tighten bolts and Nylon Lock nuts until machine is fully assembled.

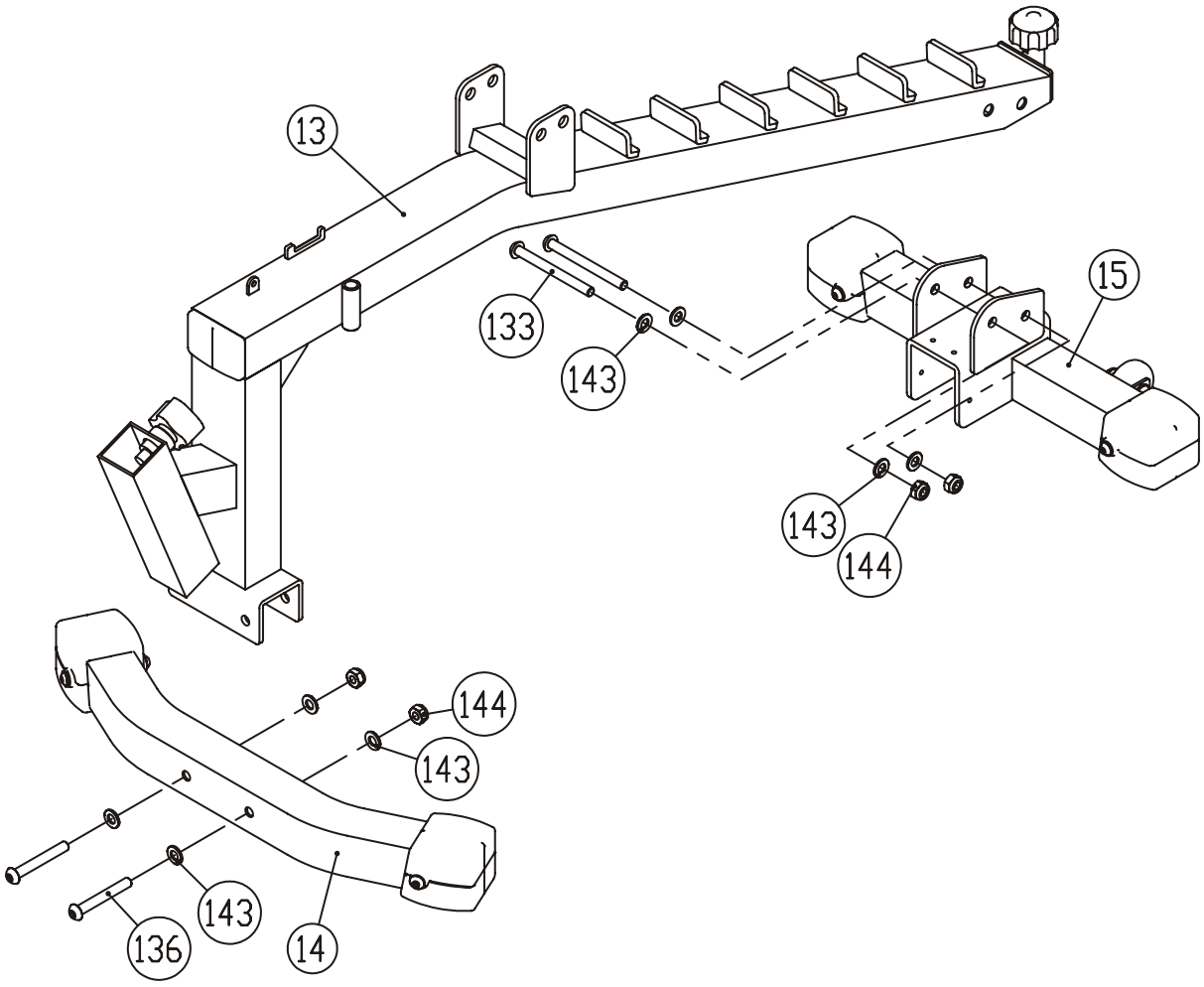

Step 12

1. Attach the Bench Seat Pad Support (#16) to the Bench Main Frame (#13), using:

   one M12*125 BHCS (#132) two Φ13*Φ24*1.5 Flat Washers (#125)

   one M12 Nylon Lock Nut (#126)

2. Attach the Bench Seat Pad ADJ. Bar (#64) to the Bench Main Frame (#13), using:

   one Φ1.5*Φ13*43 Spring (#66) one Φ13*Φ24*1.5 Flat Washers (#125)

   one M12 Nylon Lock Nut (#126)

Note: Hand tighten bolts and Nylon Lock nuts until machine is fully assembled.

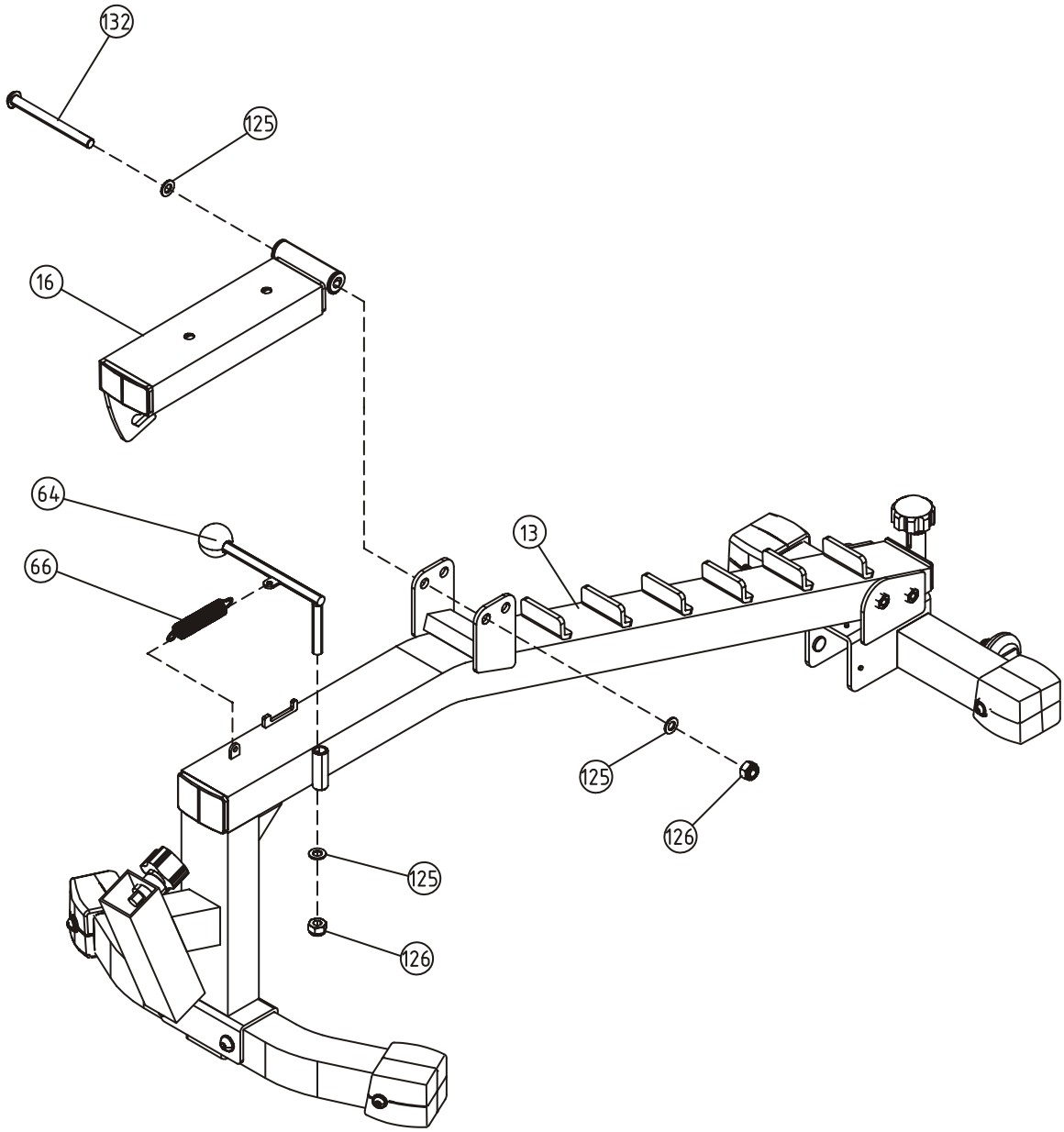

Step 13

1. Attach the Bench Back Pad Support (#17) to the Bench Main Frame (#13), using:

   one M12*125 BHCS (#132) two Φ13*Φ24*1.5 Flat Washers (#125)

   one M12 Nylon Lock Nut (#126)

2. Attach the Bench Back Pad ADJ. Frame (#39) to the Bench Back Pad Support (#17), using:

   one M12*125 BHCS (#132) two Φ13*Φ24*1.5 Flat Washers (#125)

   one M12 Nylon Lock Nut (#126)

Note: Hand tighten bolts and Nylon Lock nuts until machine is fully assembled.

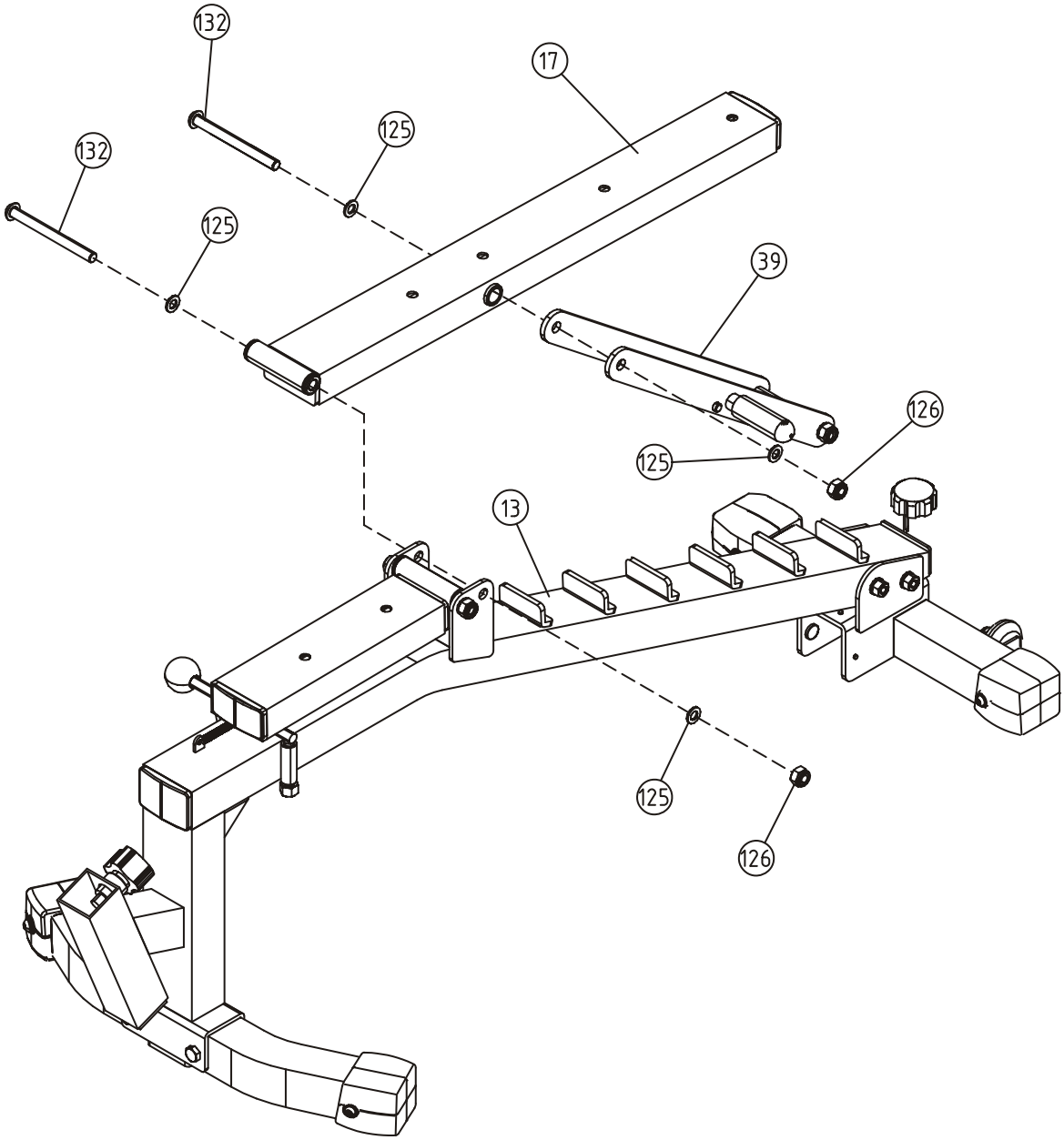

Step 14

1. Attach the BENCH Seat Pad (#48) and the Back Pad (#49) to the Bench Seat Pad Support (#16) and the Bench Back Pad Support (#17), using:
   six M10*65 BHCS (#138) six Φ11*Φ20*2 Flat Washers (#143)
2. Attach two Foam Padding (#58) to the Foam Adjustable Bracket (#18), using:
   one Foam Shaft (#40) four Φ66*8 Plastic Washer (#90)
   two Φ38*Φ11*2 Chrome Washers (#101) two Φ11*Φ20*2 Flat Washers (#143)
   two Φ10 Spring Washers (#119) two M10*25 BHCS (#128)
3. Attach the Foam Adjustable Bracket (#18) to the Bench Main Frame (#13).

Note: Hand tighten bolts and Nylon Lock nuts until machine is fully assembled.

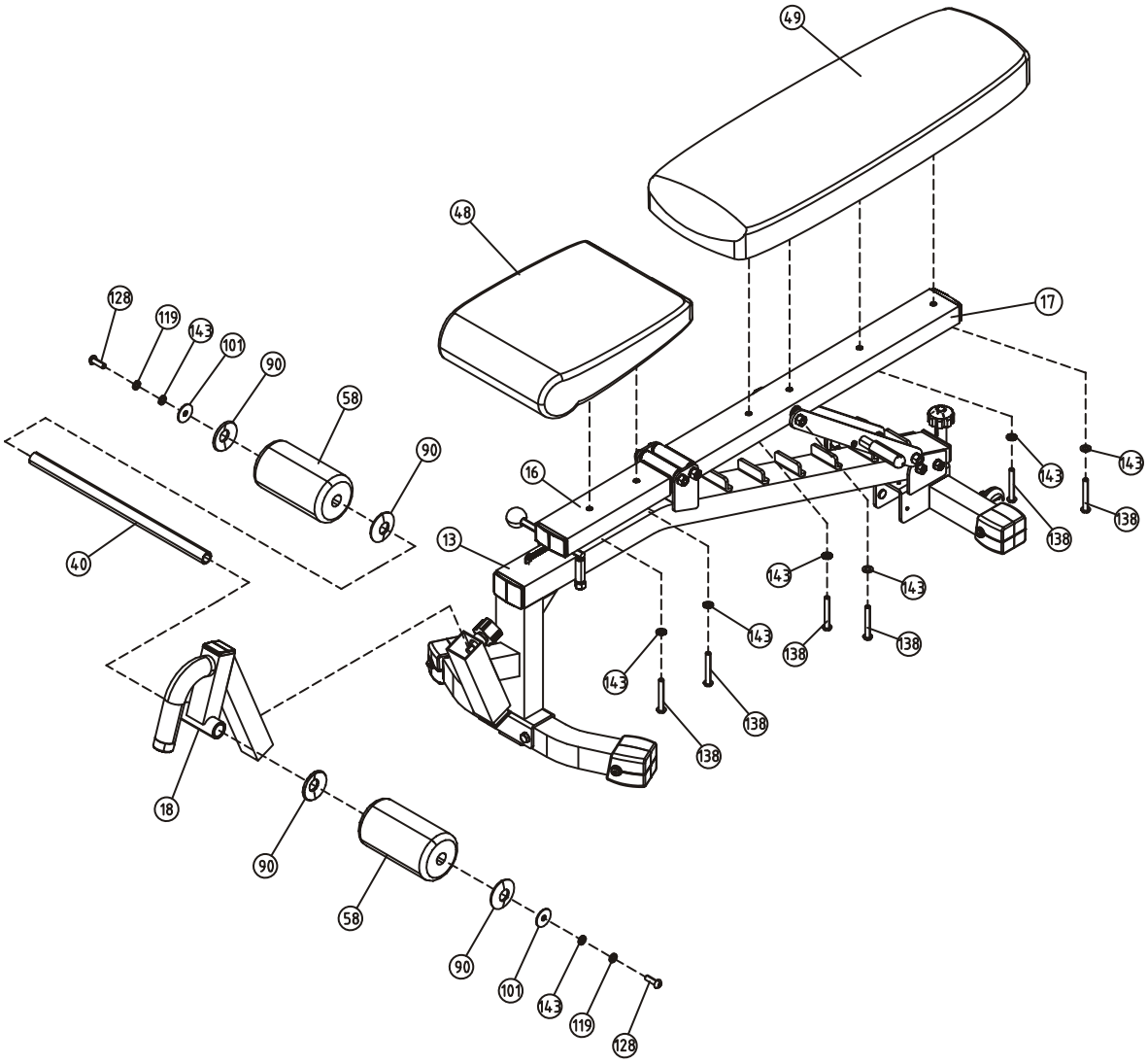

Step 15

1. Attach the Left & Right Squat Arm (#37,#36) to the Press Arm (#35), using:
   two Safety Pins (#73)
2. Attach two Foam Padding (#58) to the Left & Right Squat Arm (#37,#36), using:
   two Φ66*8 Plastic Washers (#90)
   two Φ38*Φ11*2 Chrome Washers (#101)
   two Φ11*Φ20*2 Flat Washers (#143)
   two Φ10 Spring Washers (#119)
   two M10*25 BHCS (#128)

Note: Hand tighten bolts and Nylon Lock nuts until machine is fully assembled.

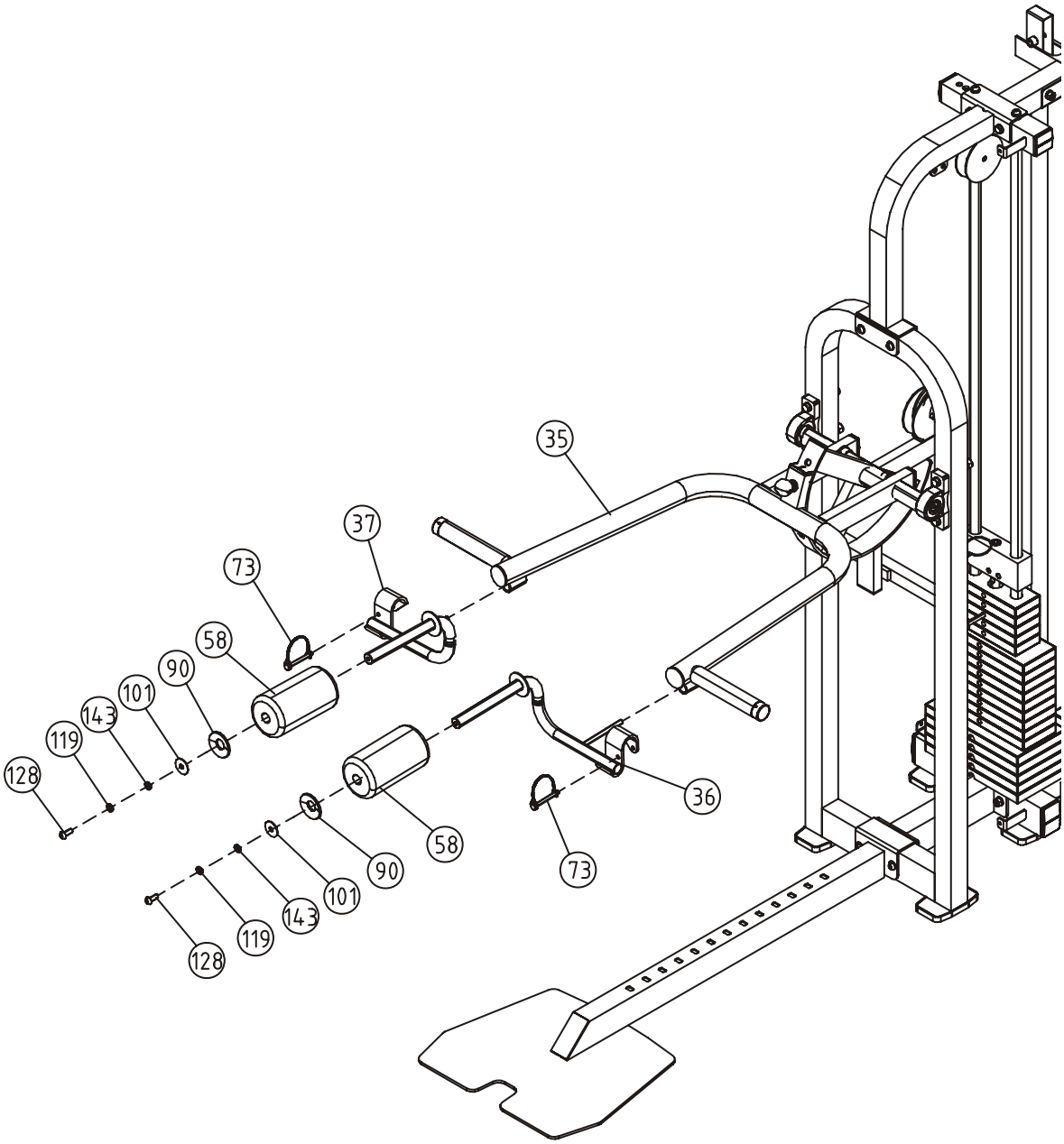

Step 16

1. Attach the 546*290*75 Back Pad (#51) to the Back Pad ADJ. Bracket (#28), using:
   two M10*50 BHCS (#127) two Φ11*Φ20*2 Flat Washers (#143)
2. Attach the 546*318*75 Seat Pad (#50) to the Seat Pad Support (#27), using:
   two M10*50 BHCS (#127) two Φ11*Φ20*2 Flat Washers (#143)
3. Attach the Back Pad ADJ. Bracket (#28) to the Main Upright (#7).
4. Attach the Seat Pad Support (#27) to the Seat Pad Support Receptacle (#6).

Note: Wrench Tighten bolts and Nylon Lock nuts.

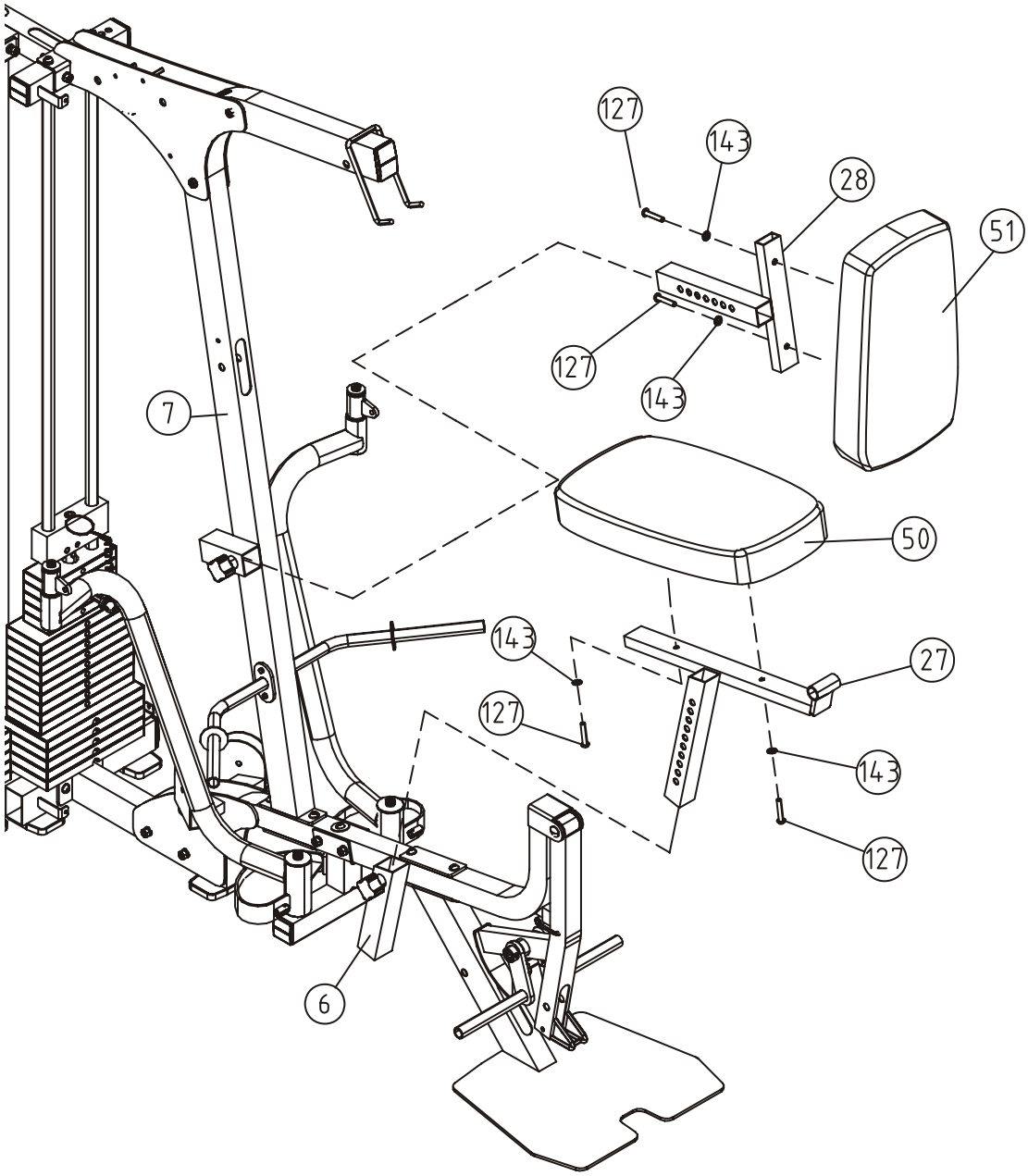

Step 17

1. Attach two Foam Padding (#58) to Left Leg & Right Hold Leg Frame (#29,#30), using:
   two Φ25 Roller Pad Tube Caps (#89)
2. Attach two Foam Padding (#58) to the Seat Pad Support (#27), using:
   one Long Foam Tube (#34)
   two Φ66*8 Plastic Washers (#90)
   two Φ25 Roller Pad Tube Caps (#89)
   one M8*6 Socket Set Screw (#97)
3. Attach two Foam Padding (#58) to the Foam Frame w/Shaft (#26) and the Foam Frame w/o Shaft (#25), using:
   two Φ25 Roller Pad Tube Caps (#89)

Note: Wrench Tighten bolts and Nylon Lock nuts.

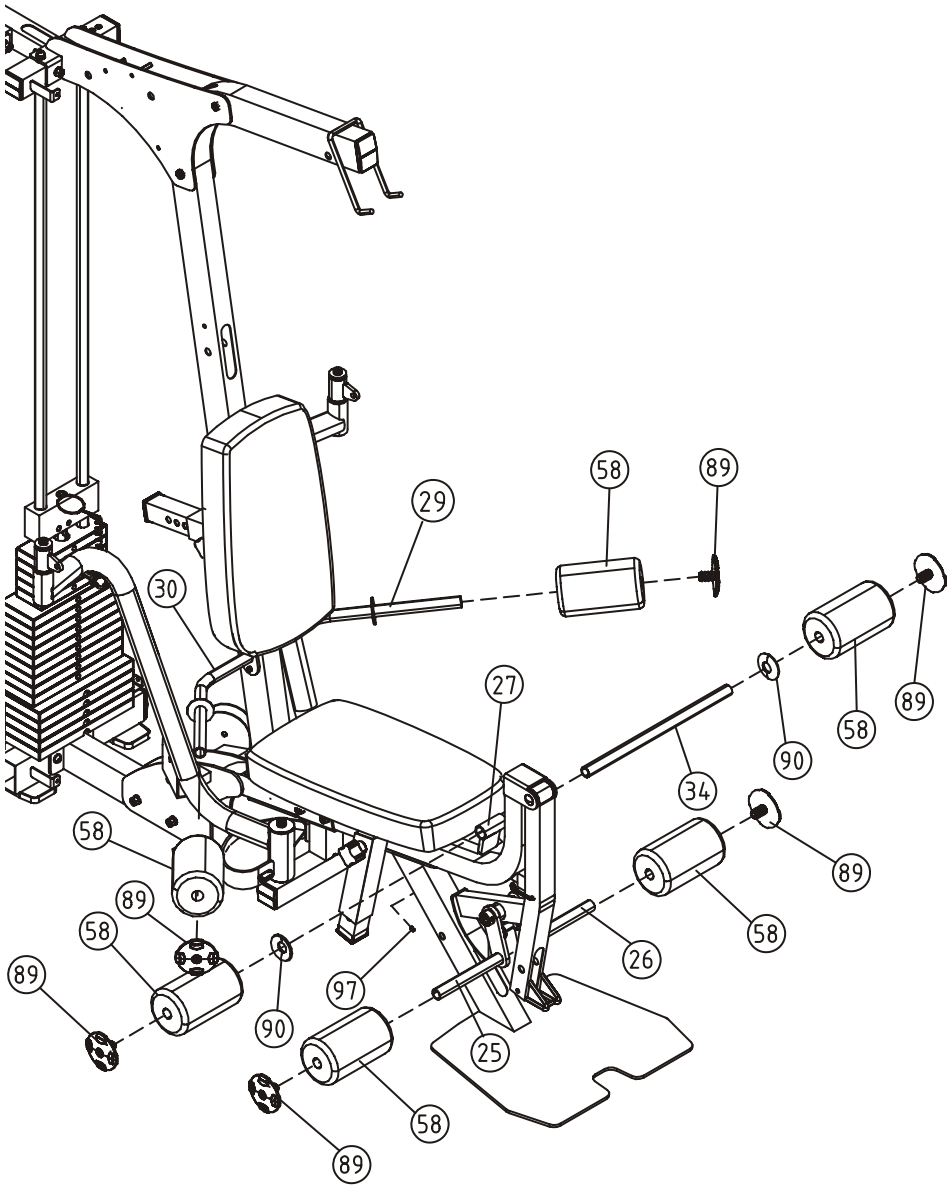

Step 18

1. Attach the Lat Cable (#110) to the Top Plate (#55).
2. Remove hardware and ball from the other end of the Lat Cable (#110). Follow the diagram above to Attach the Lat Cable (#110) and seven 4.5" Pulleys (#57) to the Up Frame (#2), the Pulley Bracket w/Shaft (#33), the Right Top Frame For Guide Rod (#5), the Pulley Bracket (#32), the Main Upright (#7), using:

   two M10*45 BHCS (#141)
   one M10*75 BHCS (#136)
   one M10*70 BHCS (#137)
   one M10*80 BHCS (#135)
   two M10*85 BHCS (#134)
   fourteen Φ11*Φ20*2 Flat Washers (#143)
   seven M10 Nylon Lock Nuts (#144)
   one 45*74*3 Cable Retainer Bracket (#46)
   four Φ20*Φ10.5*19.5 Longer Pulley Spacers (#121)
   four Φ20*Φ10.5*14 Long Pulley Spacers (#123)
3. Attach hardware and ball to the Lat Cable (#110).

Note: Wrench Tighten bolts and Nylon Lock nuts.

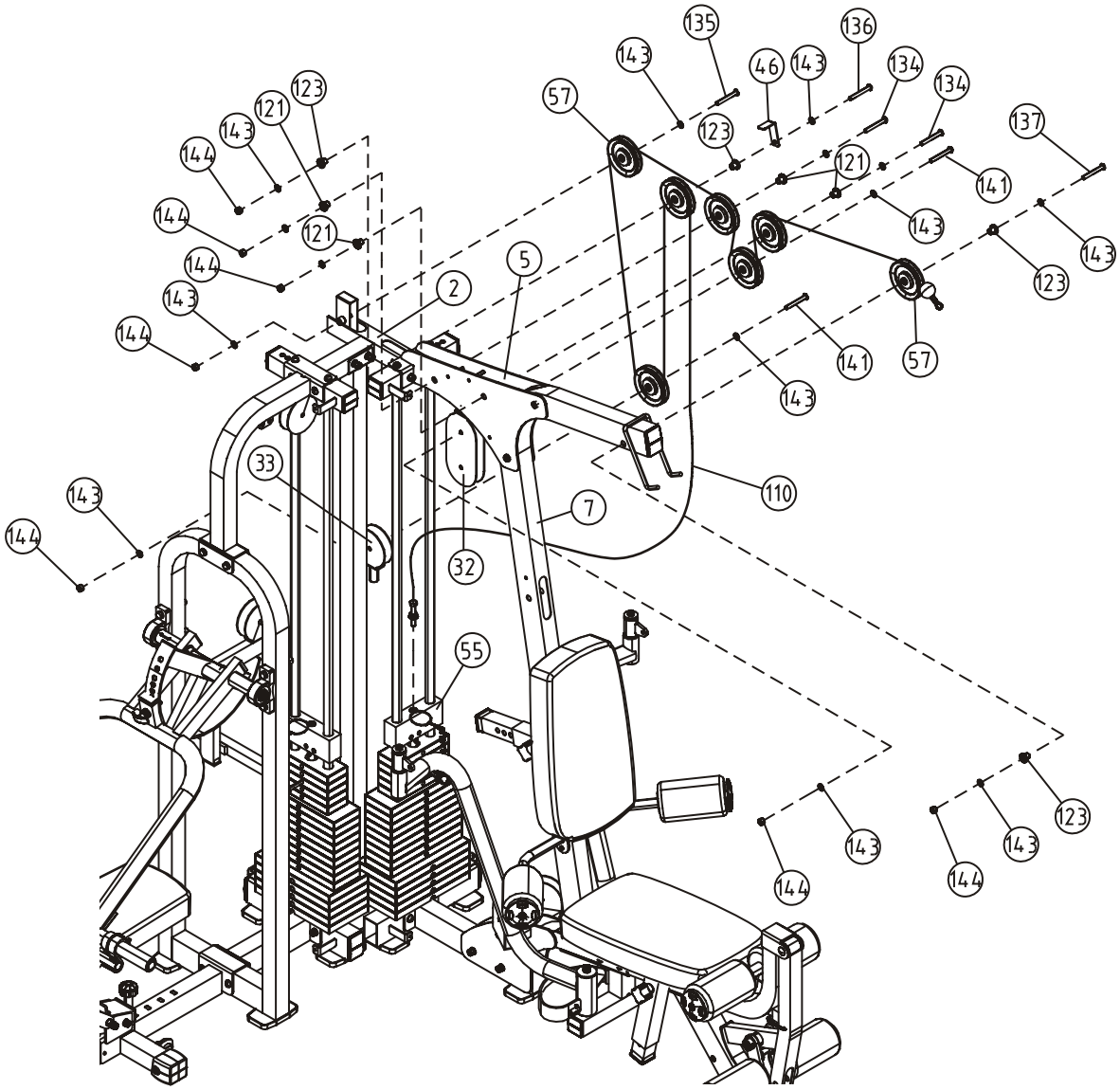

Step 19

Attach the Leg Press Cable (#113) to the Pulley Bracket w/Shaft (#33) and the Rear Frame (#1), using:

one M10*60 BHCS (#139)
two Φ11*Φ20*2 Flat Washers (#143)
one M10 Nylon Lock Nuts (#144)
one Cable Adaptor (#124)

Note: Wrench Tighten bolts and Nylon Lock nuts.

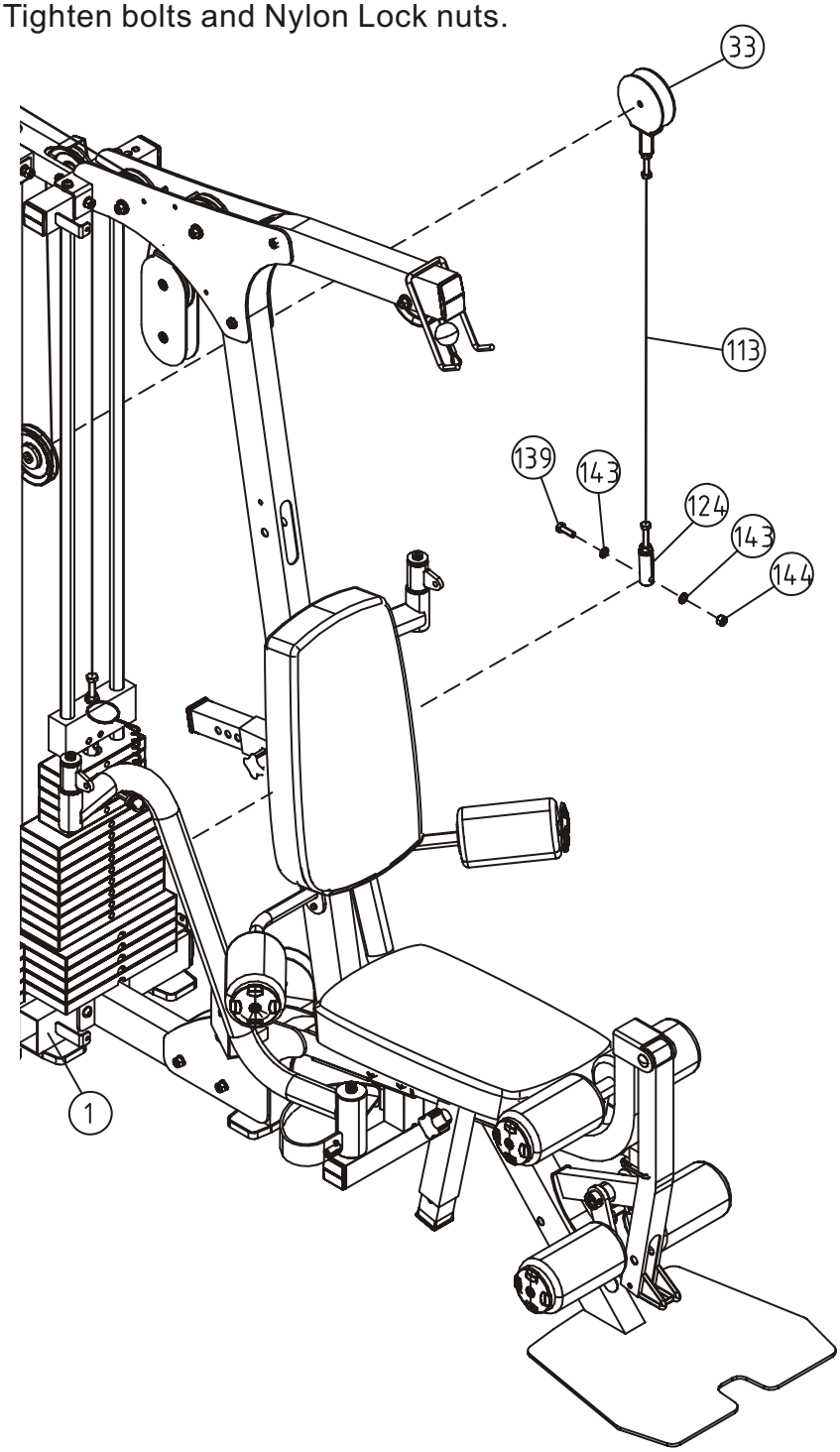

Step 20

1. Remove hardware and ball from the other end of the Low Row/Abdominal Cable (#111). follow the diagram above to Attach the Low Row/Abdominal Cable (#111) and six 4.5" Pulleys (#57) to the Leg Extension Lever (#20), the Front Upright (#19), the Seat Pad Support Receptacle (#6), the Pulley Bracket (#32), the Pulley Bracket Block (#31), the Main Upright (#7), using:

   two M10*45 BHCS (#141)
   one M10*85 BHCS (#134)
   one M10*65 BHCS (#138)
   six M10 Nylon Lock Nuts (#144)
   one M10*70 BHCS (#137)
   one M10*75 BHCS (#136)
   twelve Φ11*Φ20*2 Flat Washers (#143)
   four Φ20*Φ10.5*14 Long Pulley Spacers (#123)
   two Φ20*Φ10.5*19.5 Longer Pulley Spacers (#121)
   two Φ20*Φ10.5*11.5 Short Pulley Spacers (#122)
   one 45*74*3 Cable Retainer Bracket (#46)

2. Attach hardware and ball to the Low Row/Abdominal Cable (#111).

Note: Wrench Tighten bolts and Nylon Lock nuts.

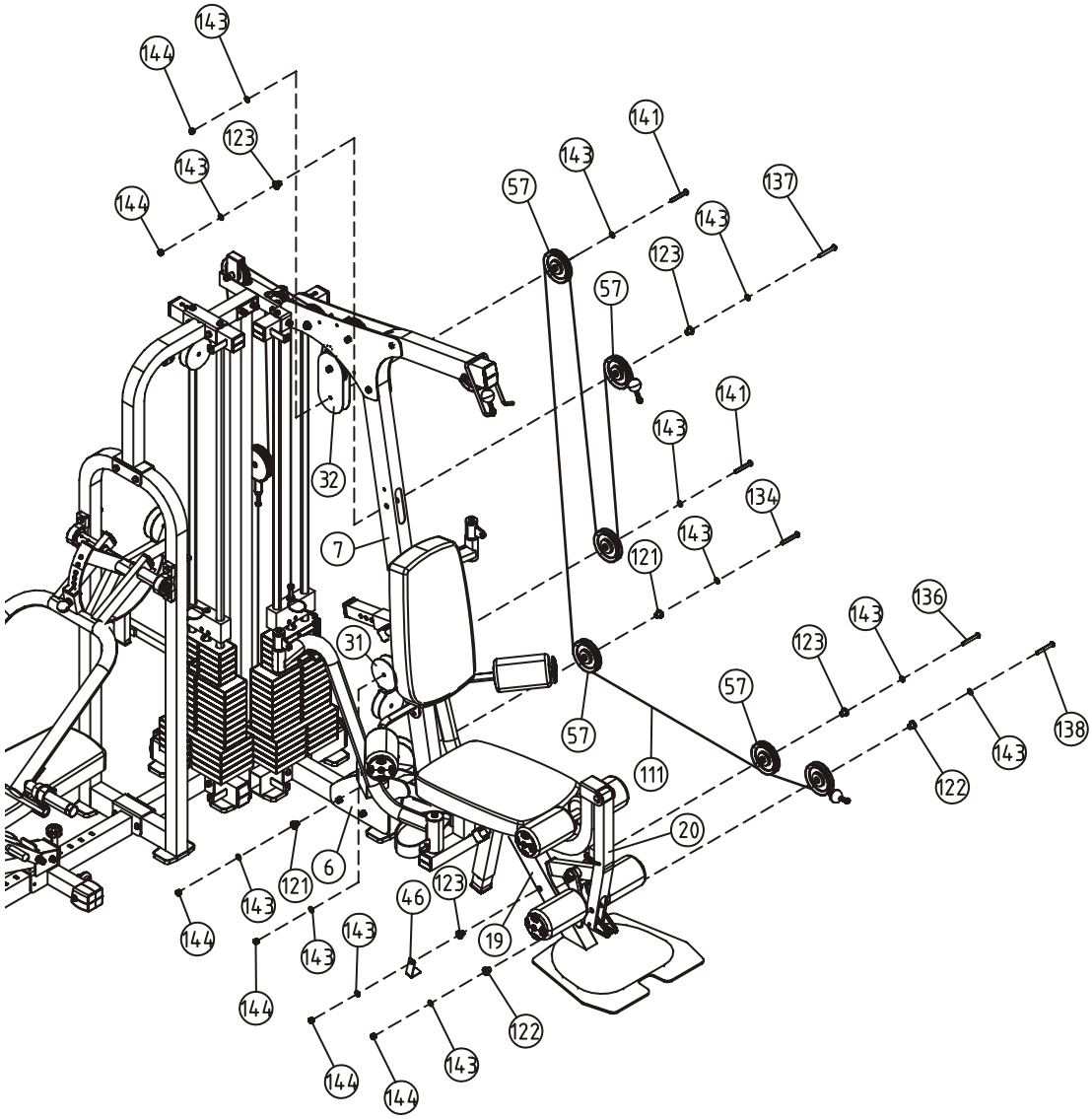

Step 21

Attach the Pec Dec Cable (#112) and three 4.5" Pulleys (#57) to Seat Pad Support Receptacle (#6), the Pulley Bracket Block (#31), Left & Right Pec Dec Arm (#22,#23), using:

three M10*45 BHCS (#141)
three M10 Nylon Lock Nuts (#144)
six Φ11*Φ20*2 Flat Washers (#143)
two M4*20 Flat Philips Screws (#103)

Note: Wrench Tighten bolts and Nylon Lock nuts.

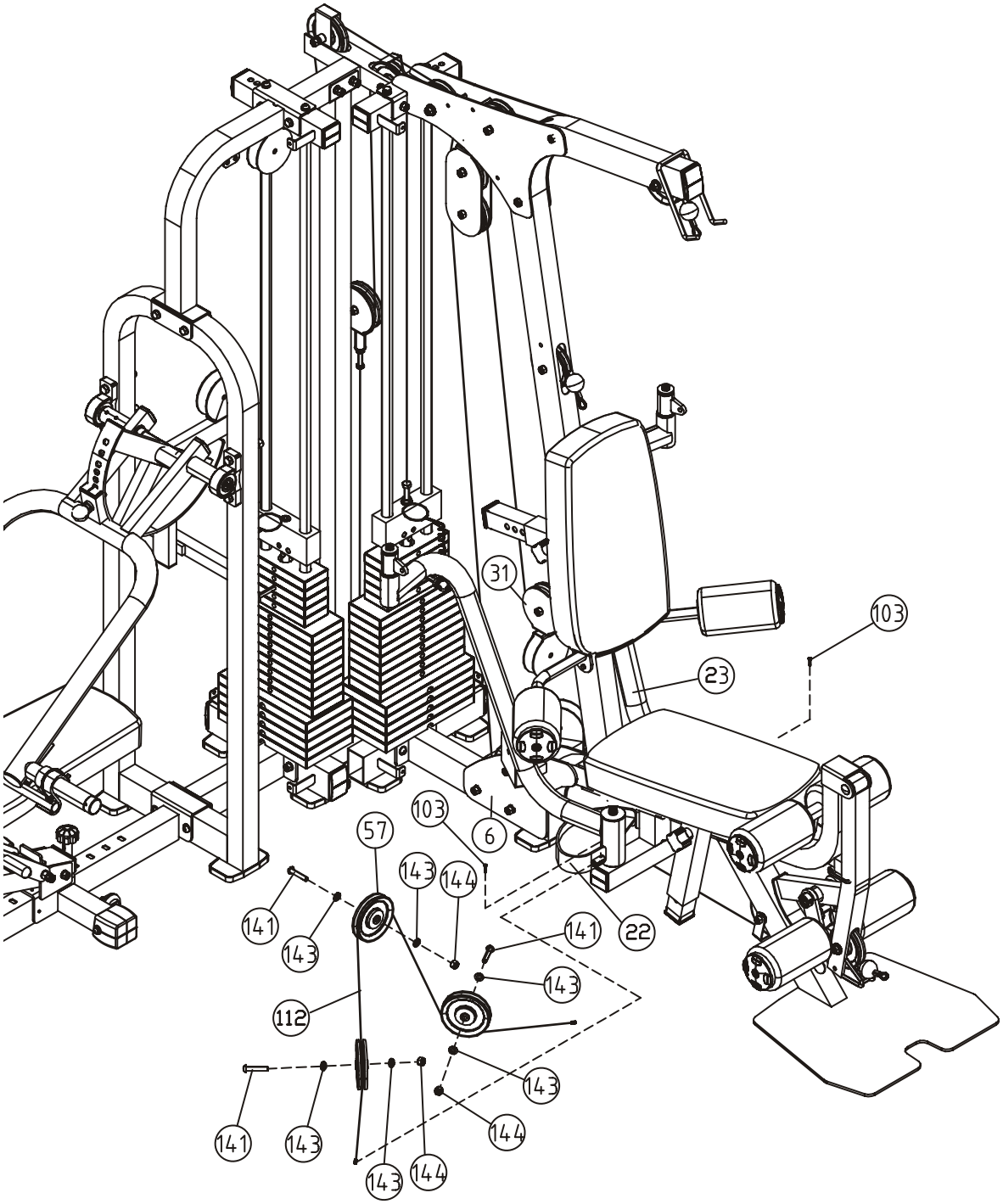

Step 22

1. Attach the Long Chest Cable (#114) to the Top Plate (#55).
2. Follow the diagram above to Attach the Long Chest Cable (#114) and two 4.5" Pulleys (#57) to the Left Top Frame For Guide Rod (#9), the Pulley Bracket w/Shaft (#33), using:

   three M10 Nylon Lock Nuts (#144) four Φ11*Φ20*2 Flat Washers (#143)
   three M10*45 BHCS (#141)

Note: Wrench Tighten bolts and Nylon Lock nuts.

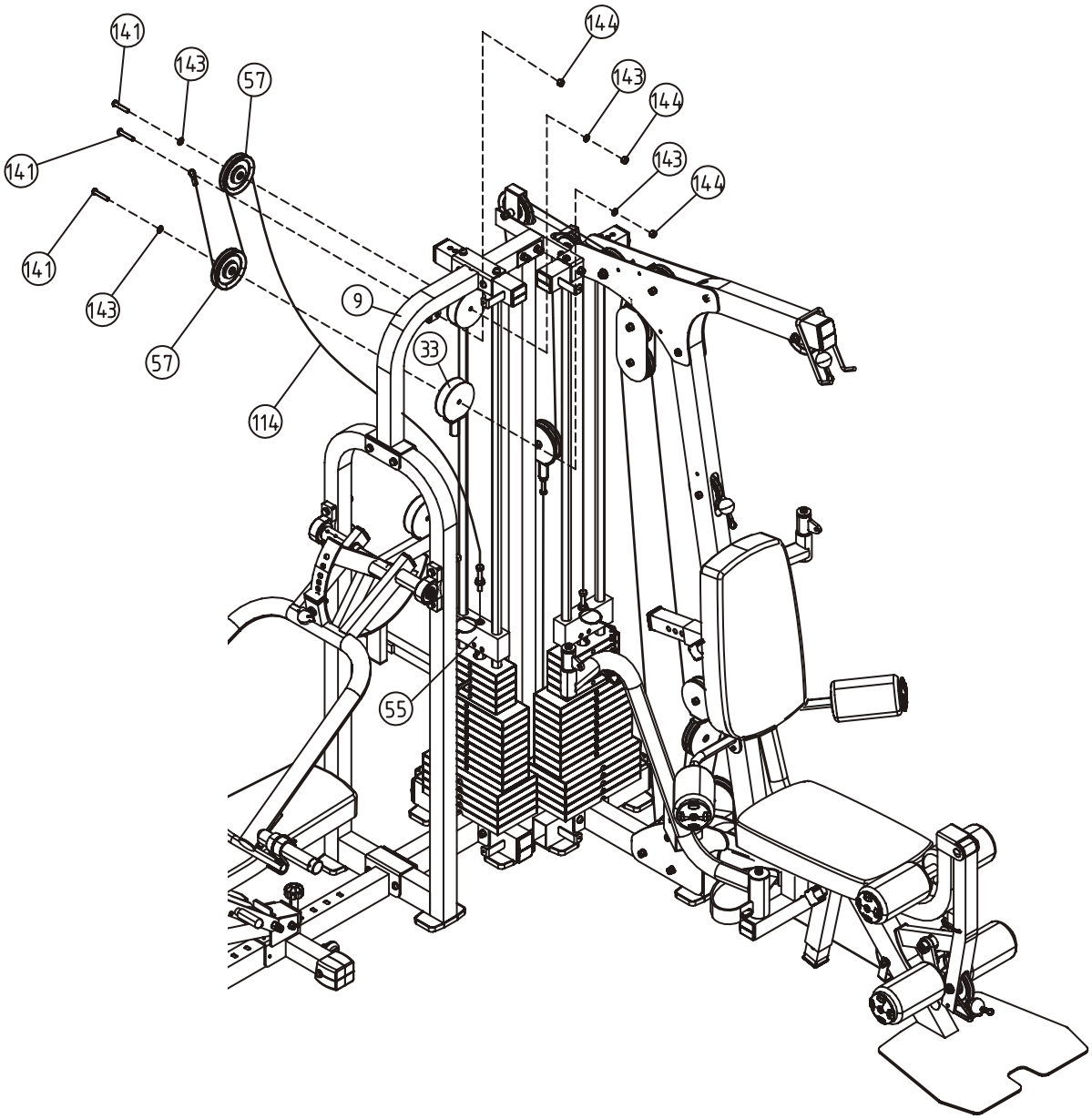

Step 23

1. Attach the Short Chest Cable (#115) to the Pulley Bracket w/Shaft (#33).
2. Follow the diagram above to Attach the Short Chest Cable (#115) and one 4.5" Pulleys (#57) to the Chest Press Cam (#12), the Left Top Frame For Guide Rod (#9), using:
   two M10*45 BHCS (#141) two Φ11*Φ20*2 Flat Washers (#143)
   two M10 Nylon Lock Nuts (#144)

Note: Wrench Tighten bolts and Nylon Lock nuts.

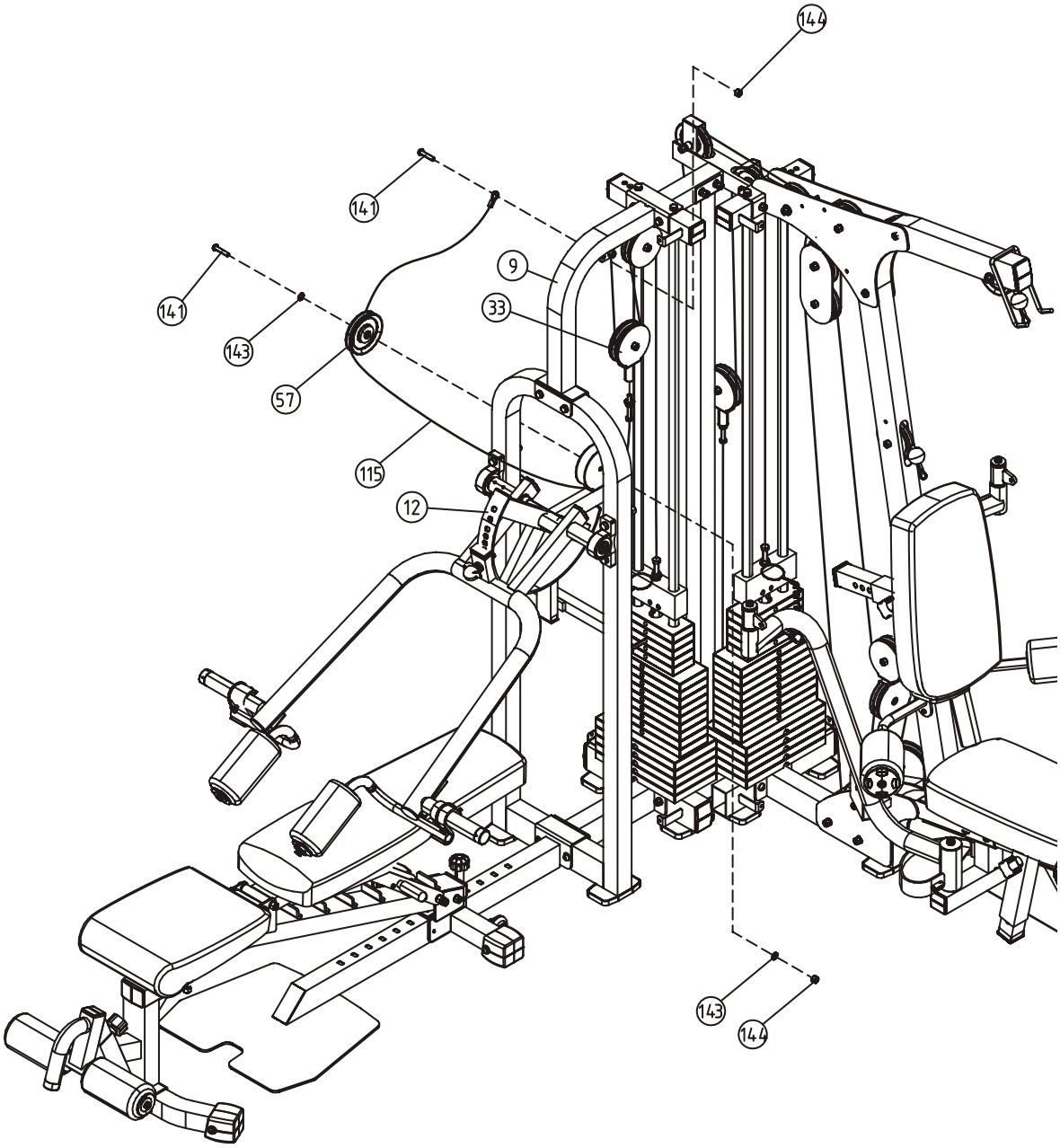

Step 24

1. Attach the Long Lat Bar (#43) to the Lat Cable (#110), using:
   two Gear Hooks (#87) one Φ5*5 Short Chain (#88)
2. Attach two Lat Straps (#61) to two Pec Dec Handle Bar (#24), using:
   two Gear Hooks (#87)
3. Attach the Ab Strap (#60) to the Low Row/Abdominal Cable (#111), using:
   one Gear Hook (#87)
4. Attach the Short Lat Bar (#44) or the Ankle Strap (#62) to the Low Row/ Abdominal Cable (#111), using:
   one Gear Hook (#87) one Φ5*12 Long Chain (#116)

Note: Wrench Tighten bolts and Nylon Lock nuts.

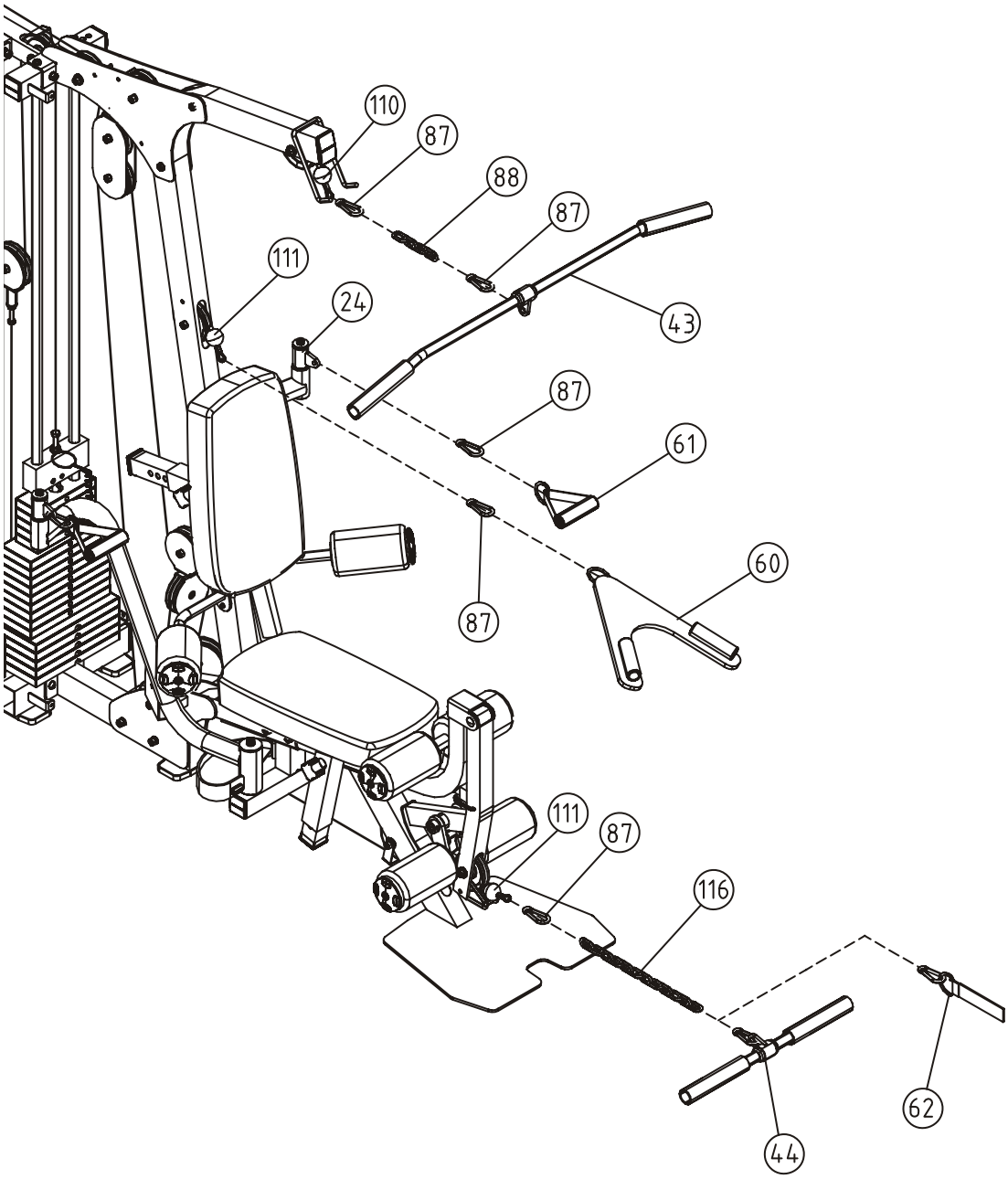

Step 25

1. Attach two Top Weight Shrouds (#145), two Middle Weight Shrouds (#157), two Bottom Weight Shrouds (#41) to the Rear Frame (#1) and the Up Frame (#2), using:
   two M10*25 BHCS (#128)
   two M8*15 BHCS (#98)
   two Φ10 Spring Washers (#119)
   two Φ11*Φ20*2 Flat Washers (#143)
   two Φ9*Φ16*1.6 Flat Washers (#155)
2. Attach the Weight Shroud B (#42) to the Rear Frame (#1) and the Up Frame (#2), using:
   four M8*15 BHCS (#98)
   four Φ9*Φ22*2 Flat Washers (#117)

Note: Wrench Tighten bolts and Nylon Lock nuts.

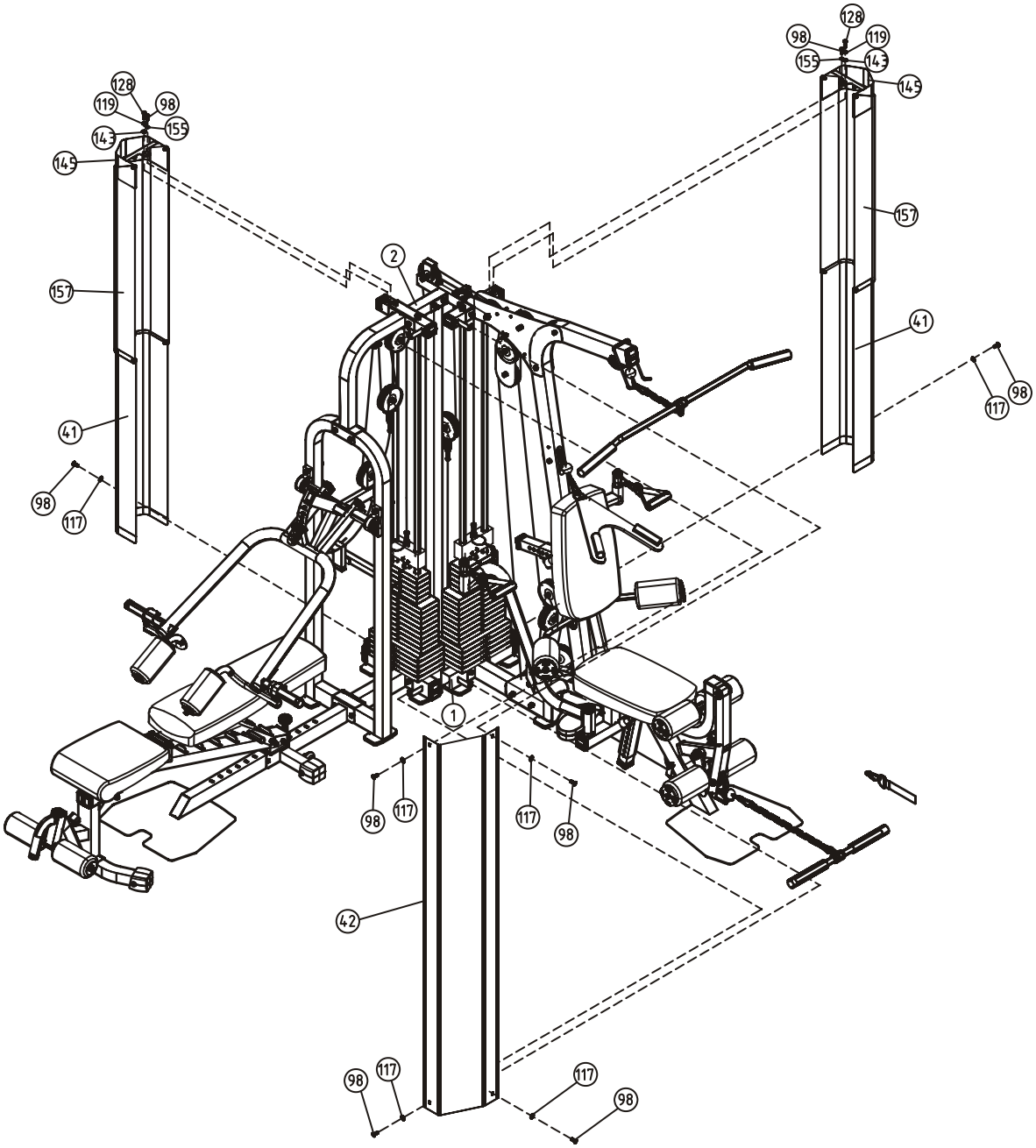

Cable View

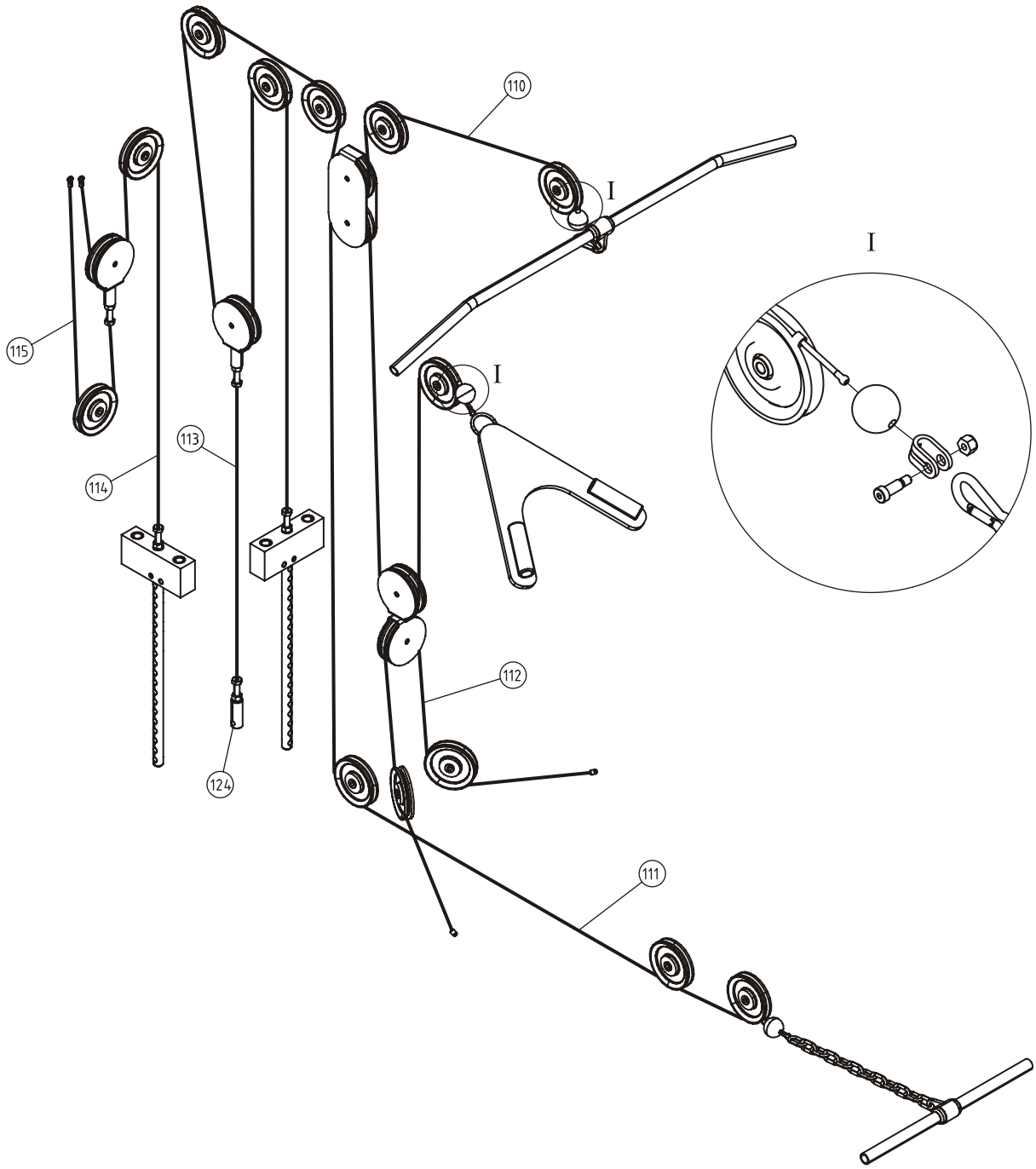

Weight Ratios

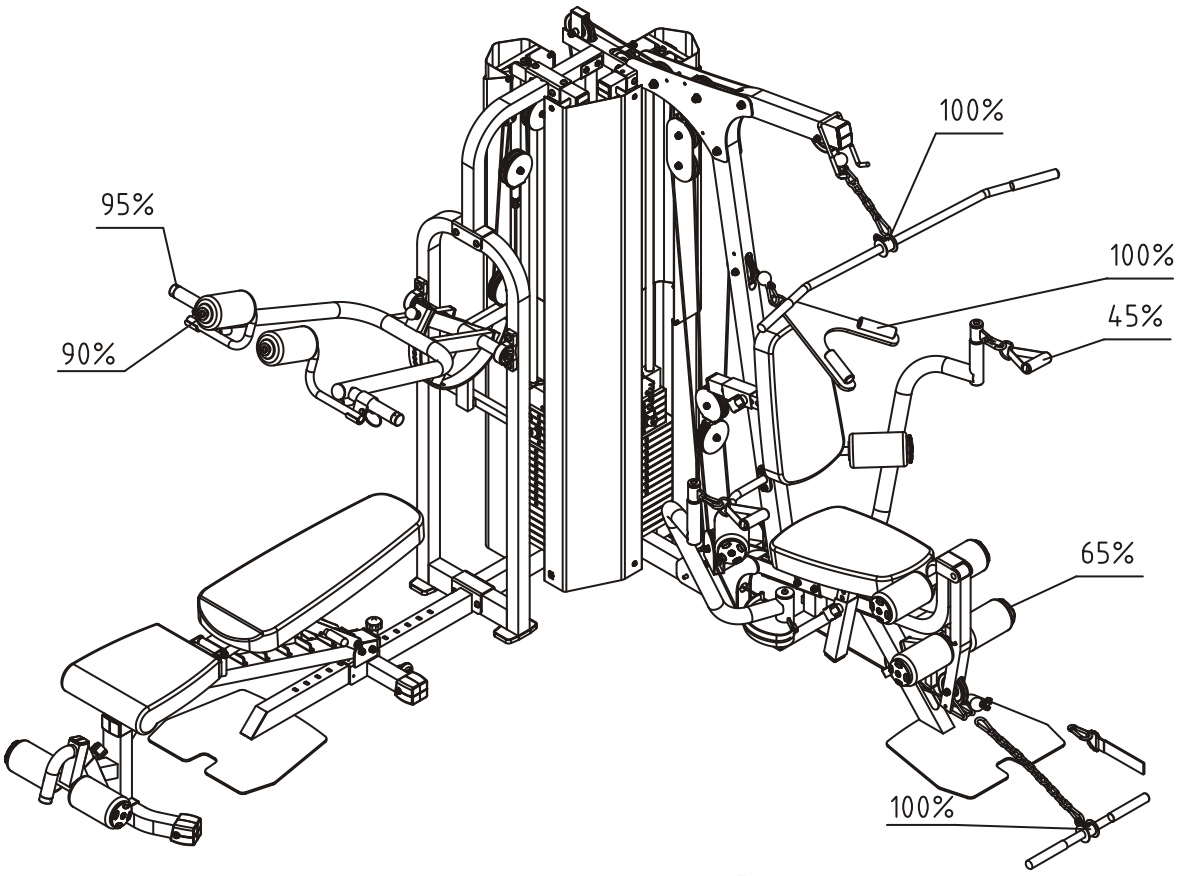

	100%	95%	90%	65%	45%
1	10	9.5	9	6.5	4.5
2	15	14	13.5	10	7
3	20	19	18	13	9
4	25	24	23	16	11
5	30	29	27	20	14
6	35	33	32	23	16
7	45	43	41	29	20
8	55	52	50	36	25
9	65	62	59	42	29
10	75	71	68	49	34
11	85	81	77	55	38
12	95	90	86	62	43
13	105	100	95	68	47
14	115	110	104	75	52
15	125	119	113	81	56
16	140	133	126	91	63
17	155	147	140	101	70
18	170	162	153	111	76
19	185	176	167	120	83
20	200	190	180	130	90

Maintenance Schedule

ROUTINE	COMMERCIAL MAINTENANCE	HOME MAINTENANCE	LATEST DATE ENTRY						
Inspect; Links, Pull Pins, Snap Locks, Swivels, Weight Stack Pins	DAILY	WEEKLY							
Clean; Upholstery	DAILY	WEEKLY							
Inspect; Cables or Belts and their tension	DAILY	WEEKLY							
Inspect; Accessory Bars, and Handles	WEEKLY	3 MONTHS							
Inspect; All Decals	WEEKLY	3 MONTHS							
Inspect; All Nuts and Bolts, Tighten if needed	WEEKLY	3 MONTHS							
Inspect; Anti-Skid Surface	WEEKLY	3 MONTHS							
Clean & Lubricate; Guide Rods with a Teflon (PTFE) based lubricant (Superlube)	MONTHLY	3 MONTHS							
Lubricate; Seat Sleeves, Turcite Bushings, Linear Bearing	MONTHLY	3 MONTHS							
Clean and Wax; All Glossy Finishes	6 MONTHS	YEARLY							
Repack with Grease; Linear Bearings	6 MONTHS	YEARLY							
Replace; Cables, Belts and Connecting Parts	YEARLY	3 YEARS							

Your equipment comes with a commercial maintenance decal. For personal, in home use, please follow the home maintenance schedule listed above.

General Maintenance Information

Links, Pull-Pins, Snap Hooks, Swivels, Weight Stack Pins:
*Check all pieces for signs of visible wear or damage.
*Check springs in snap hooks and pull-pins for proper tension and alignment.
*If the spring sticks or has lost its rigidity, replace it immediately.

Upholstery:
*To ensure prolonged upholstery life and proper hygiene, all upholstered pads should be wiped down with a damp cloth after every workout.
*Periodically take the time to use a mild soap or an approved vinyl upholstery cleaner to deter the onset of cracking or drying. Avoid using any abrasive cleaners or cleaners not intended for use on vinyl.
*Replace ripped or warn upholstery immediately.
*Keep sharp or pointed objects clear of all upholstery.

Decals:
*Inspect and familiarize yourself with any safety warnings or other user information posted on each decal.

Nuts and Bolts:
*Inspect all nuts and bolts for any loosening and tighten if needed.
*Go through a re-tightening sequence periodically to ensure that all hardware is tensioned proper.

Anti-Skid Surfaces:
*These surfaces are designed to supply secure footing and need to be replaced if they appear worn or become slippery.

Belts and Cables:
*We uses only high quality belt, and mil-spec cables.
*Visually inspect the belts and cables for fraying, cracking, peeling or discoloration.
*While the machine is not in use, carefully run your fingers along the belt or cable to feel for thinning or bulging areas.
*Replace belts and cables immediately at the first signs of damage or wear. Do not use equipment until belts or cables have been replaced.

Belt and Cable Tension:
*Referring to the Owners Manual, when belts or cables are used check all bolts attachments to be sure they are properly attached.
*Check slack in cables and re-adjust cable tension if needed.

Seat Sleeves, Guide Rods:
*Wipe down adjusting tubes with a dust free rag before applying lubricant.
*Lubricate seat sleeves and Guide Rods with a Silicon or Teflon based lubricant spray.

Linear Bearings:
*Referring to the Owners Manual carefully disassemble the bearing from its housing and place a finger full of light grease (lithium, super lube, etc.) into the inside of the bearing. Using your finger, press the grease into the ball-bearings and their tracks. repeat until the ball-bearing tracks are full of grease. Insert the shaft back into the bearing and wipe off excess grease.

PLEASE KEEP THIS FOR YOUR RECORDS

Weight Training Tips

Use this manual to guide you through the basic exercises you can perform on your equipment. To gain maximum results and avoid possible injury, consult a fitness professional to develop your complete exercise program.

Always consult your physician before starting any exercise program.

To be successful in your exercise program, it is important to develop an understanding of the basic principles of strength training. Now that you have your equipment, it is only natural that you want to get started immediately. First, determine a set of realistic goals and objectives for yourself. By deciding on an exercise plan that is right for you prior to starting, you will contribute significantly to your success.

Warm up properly before engaging in weight resistance training. Stretching, yoga, jogging, calisthenics or other cardiovascular exercise can help prepare your body for the heavier workload of lifting weights.

Learn how to perform the exercise correctly before using heavy weight. Correct form is important to avoid injury and to ensure that you work the proper muscle groups.

Know your limitations. If you are new to weight training or are embarking on an exercise regimen after a long layoff, start slowly and build foundational strength over a longer period of time.

Pay attention to your breathing. Exhale when you exert is a general rule of thumb. Never hold your breath.

This unit is for gyms, Please consult with a training instructor before using.

Specifications

1. Class: H
2. Maximum Load of Trainer: 150Kg/ 330lbs.

SYSTEM CERTIFICATION ISO 9001:2000 SGS

SYSTEM CERTIFICATION ISO 14001:2004 SGS

SYSTEM CERTIFICATION OHSAS 18001 SGS

SYSTEM CERTIFICATION ISO 10015 SGS